INSTRUCTIONS AND PARTS MANUAL

UNI-BUG III
THE UNIVERSAL BUG-O WITH STITCH

Please record your equipment identification information below for future reference. This information can be found on your machine nameplate.

Model Number _____

Serial Number _____

Date of Purchase _____

Whenever you request replacement parts or information on this equipment, always supply the information you have recorded above.

LIT-UNI3-IPM-0412

Bug-O Systems is guided by honesty, integrity and ethics in service to our customers and in all we do.

BUG-O SYSTEMS
A DIVISION OF WELD TOOLING CORPORATION
280 TECHNOLOGY DRIVE CANONSBURG, PENNSYLVANIA 15317-9564 USA
PHONE: 412-331-1776 http://www.bugo.com FAX: 412-331-0383

SAFETY

PROTECT YOURSELF AND OTHERS FROM SERIOUS INJURY OR DEATH. KEEP CHILDREN AWAY. BE SURE THAT ALL INSTALLATION, OPERATION, MAINTENANCE AND REPAIR PROCEDURES ARE PERFORMED ONLY BY QUALIFIED INDIVIDUALS.

ELECTRIC SHOCK can kill.

1) The equipment is not waterproof. Using the unit in a wet environment may result in serious injury. Do not touch equipment when wet or standing in a wet location.

2) The unused connectors have power on them. Always keep the unused connectors covered with the supplied protective panels. Operation of the machine without the protective panels may result in injury.

3) Never open the equipment without first unplugging the power cord or serious injury may result.

4) Verify the customer-supplied power connections are made in accordance with all applicable local and national electrical safety codes. If none exist, use International Electric Code(IEC) 950.

5) Never remove or bypass the equiment power cord ground. Verify the equipment is grounded in accordance with all applicable local and national electrical safety codes. If none exist, use International Electric Code (IEC) 950.

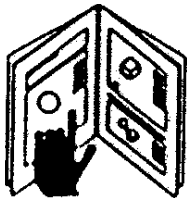

READ INSTRUCTIONS.

Read the instruction manual before installing and using the equipment.

EQUIPMENT DAMAGE POSSIBLE.

1) Do not plug in the power cord withou first verifying the equipment is OFF and the cord input voltage is the same as required by the machine or serious damage may result.

2) Always verity both the pinion and wheels are fully engaged before applying power or equipment damage may occur.

3) Do not leave the equipment unattended.

4) Remove from the worksite and store in a safe location when not in use.

FALLING EQUIPMENT can cause serious personal injury and equipment damage.

Faulty or careless user installation is possible. As a result, never stand or walk underneath equipment.

MOVING PARTS can cause serious injury.

1) Never try to stop the pinion from moving except by removing power or by using the STOP control.

2) Do not remove any protective panels, covers or guards and operate equipment.

HIGH FREQUENCY WARNINGS

SPECIAL PRECAUTIONS ARE REQUIRED WHEN USING PLASMA, TIG OR ANY WELDING PROCESS THAT USES HIGH FREQUENCY TO STRIKE AN ARC.

WARNING: HIGH FREQUENCY CAN EFFECT MACHINE OPERATION AND THEREFORE, WELD QUALITY.

Read the precautions below before installing and using the equipment.

PRECAUTIONS:

1) Some plasma or welding cables are strong sources of high frequency interference. NEVER lay a plasma or welding cable across the controls of the machine.

2) Always physically separate the plasma or welding cable leads from the machine cables. For example, the plasma or welding cable leads should NEVER be bundled with a pendant cable or the machine power cord. Maximize the separation between any machine cables and the plasma or welding cables.

3) Strictly follow the grounding procedures specified for the plasma or welding unit. NOTE: Some plasma and welding units produce exceptionally large amounts of high frequency noise. They may require a grounding rod be driven into the earth within six feet (2 meters) of the plasma or welding unit to become compatible with an automatic cutting or welding process.

4) If the high frequency is produced using a spark gap, adjust the points so the gap is as small as possible. The larger the gap, the higher the voltage and the higher the interference.

5) Some plasma or welding units will inject high frequency interference into the AC power line. Use separate power line branches whenever possible to power the plasma or welding source and the machine. Do not plug them into the same outlet box.

6) High frequency noise may enter the machine through the plasma or welding supply remote contactor leads. Some plasma and welding sources can produce noise spikes of up to several thousand volts. These sources are not compatible with automated cutting and welding equipment. It is recommended that the remote contactor leads on these plasma or welding sources not be connected to the machine. An alternate solution is to purchase a separate remote contactor isolation box.

UNI-BUG III

THE UNIVERSAL BUG-O WITH STITCH

INSTRUCTIONS AND PARTS MANUAL

TABLE OF CONTENTS

PAGE

5 .....Introduction / Set-Up
6 .....Set-Up Diagram
7 .....Operation
8 .....Controls
9 .....Controls Continued
10 .....Technical Data / Dimensions UNI-BUG-III
11.....Technical Data / Dimensions UNI-BUG III Bulb
12 .....Technical Data / Dimensions UNI-BUG III “T”
13 .....Technical Data / Dimensions UNI-BUG III “L”
14 .....UNI-BUG III Wiring Diagram / Parts List
15 .....UNI-BUG III Single Gun Welding Kit
16 .....UNI-BUG III Dual Gun Welding Kit
17 .....UNI-BUG III Bulb Dual Gun Welding Kit
18-19 .....UNI-BUG III “T” Dual Gun Welding Kit
20 .....UNI-BUG III “L” Dual Gun Welding Kit
21 .....UNI-2400 UNI-BUG III / Exploded View / Parts List
22 .....UNI-2410 Cover Assembly / Exploded View
23 .....UNI-2410 Cover Assembly / Parts List
24 .....UNI-2720 UNI-BUG III Bulb / Exploded View / Parts List
25 .....UNI-2820 UNI-BUG III “T” / Exploded View / Parts List
26 .....UNI-2840 UNI-BUG III “T” / Exploded View / Parts List
27 .....UNI-2920 UNI-BUG “L” / Exploded View / Parts List
28 .....UNI-1020 Base Assembly / Exploded View
29 .....UNI-1020 Base Assembly / Parts List
30 .....UNI-2020 “L” Base Assembly / Exploded View
31 .....UNI-2020 “L” Base Assembly / Parts List
32 .....UNI-2120 “T” Base Assembly / Exploded View
33 .....UNI-2120 “T” Base Assembly / Parts List
34 .....UNI-2140 “T” Base Assembly / Exploded View
35 .....UNI-2140 “T” Base Assembly / Parts List
36 .....UNI-2220 Bulb Base Assembly / Exploded View
37 .....UNI-2220 Bulb Base Assembly / Parts List
38 .....UNI-1350 Dual Welding Group / Exploded View / Parts List
39 .....UNI-1355 Dual Cable Anchor / Exploded View / Parts List
40 .....BUG-1855 Welding Group / Exploded View / Parts List
41 .....BUG-1875 Cutting Group / Exploded View / Parts List
42 .....Troubleshooting Guide
44 .....Warranty

Patents Pending

INTRODUCTION:

The **UNI-BUG III** is small enough to carry a cutting torch or welding gun into tight work areas or around very tight curves without the use of a track. The built in carrying handle allows for easy mounting and removal at any point along the work piece. The **UNI-BUG III** can weld or cut both straight line and on an inner radius as small as 6" (152mm). It will travel at speeds of 4-75 ipm (102-1905 mm/min) with a 50 lb. (22.7 kg) horizontal pulling capacity. The **UNI-BUG III** is designed to run on the edge of a bar or stiffener up to 2" (51 mm) wide, with a minimum height of 2" (51mm).

SET-UP:

The **UNI-BUG III** operates without a track as shown in the set-up diagram. A gear motor turns the two **Drive Wheels** on one side of the work piece. On the opposite side of the work piece the **Idler Wheel Bracket** supports four **Idler Wheels**. An **Idler Screw Knob** is used to move the **Idler Wheel Bracket** into the work piece, clamping the work piece between the two **Drive Wheels** and the four **Idler Wheels**. The **Support Rollers** support the machine and tilt it forward for optimal control and traction. This also sets the working direction. The machine is to be tilted in the direction of travel and should be turned around to weld or cut on the opposite side of the work piece. (See Set-Up Diagram page 6)

1. Loosen the **Idler Screw Knob** to open the gap between the **Idler Wheels** and the **Drive Wheels**. When the gap is large enough, position the machine on the work piece.

2. The machine should be firmly resting on the front and rear **Support Rollers** and tilted forward, in the direction of travel.

3. Engage the **Idler Screw Knob** until the **Drive Wheels** and the **Idler Wheels** are firmly in contact with the work piece.

4. Adjust the racking group so that the cutting torch, or welding gun is in the proper position. The arc should always be placed below the center of the machine so that the gun or torch can hold the same relative position as the machine moves from a straight to a curved work section.

SET-UP DIAGRAM:

Note: Torch holding devices not shown for clarity.

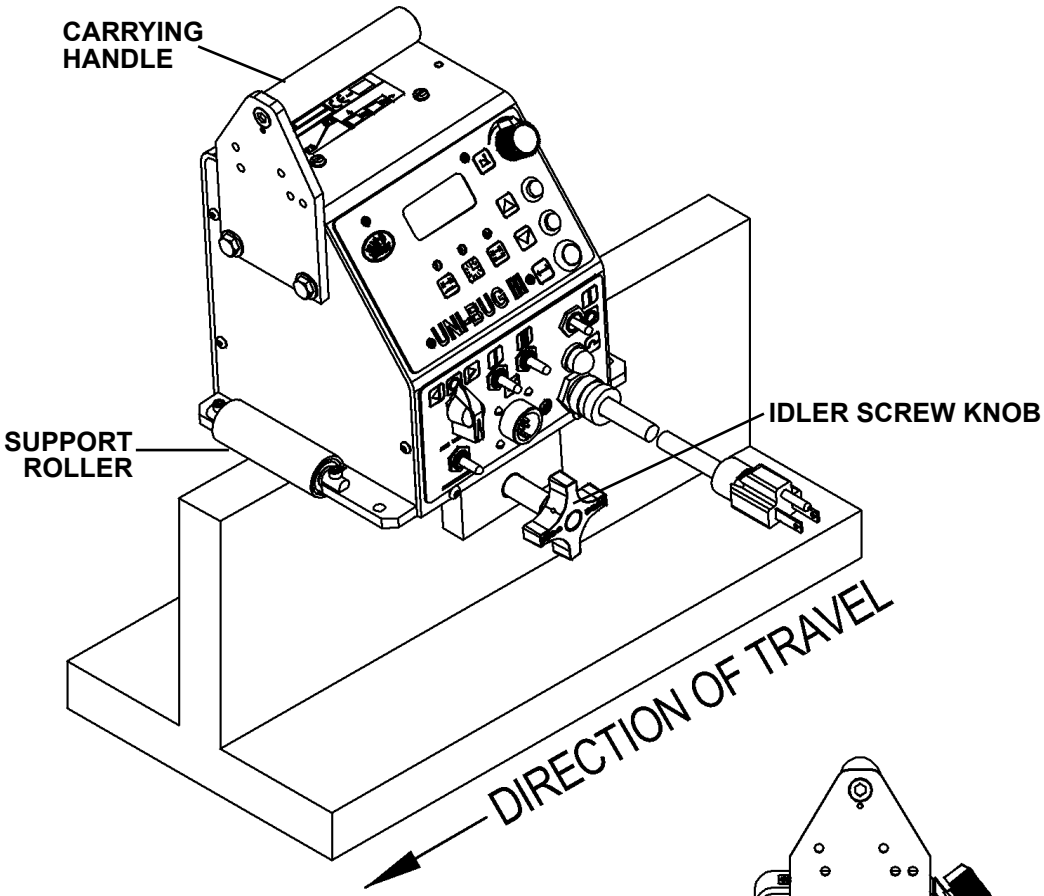

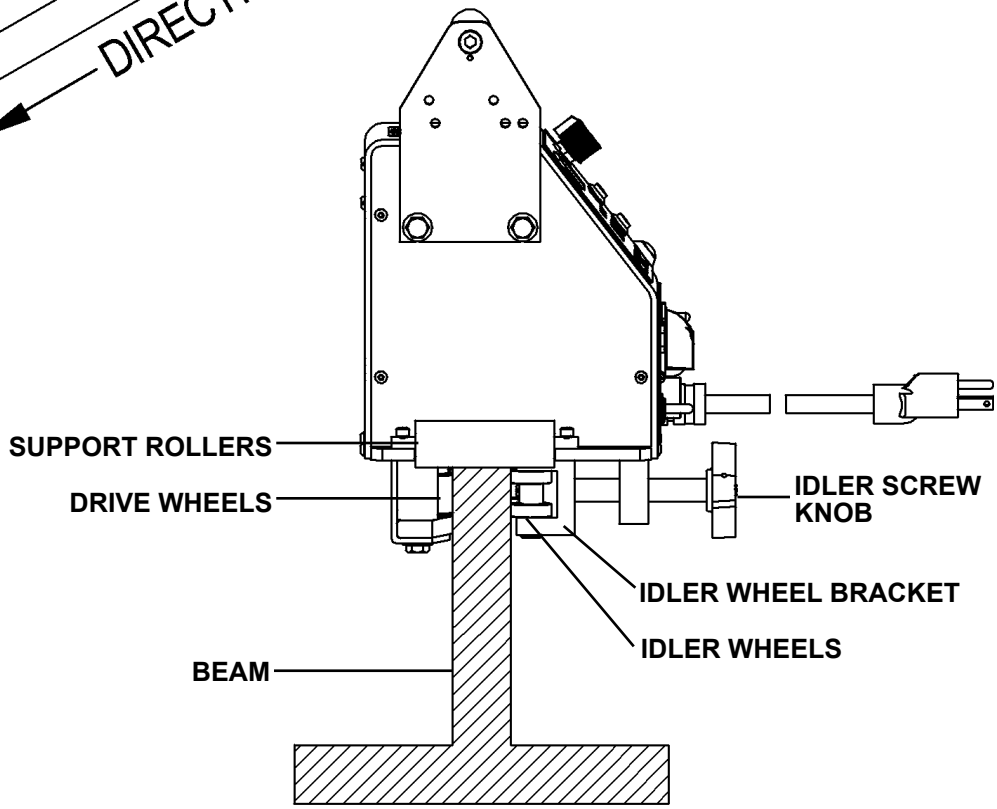

OPERATION:

Always set the **Travel Direction** switch to the **"Off"** position before powering up the machine. If the machine is powered up and the **Travel Direction** switch is in the left or right position, the controls will be inactive and not be able to be programmed until the **Travel Direction** switch is turned to the **"Off"** position.

1. When the machine **Power "On/Off** switch is in the **"On"** position the **LCD Display** shows the set travel speed. The travel speed can be pre-set or adjusted with the **Travel Speed Control**.

2. Use the **Enter** button to enter into programming mode, accept parameter values, or toggle to the next setting. Utilizing the **Increase** and **Decrease** buttons to adjust the settings. LED lights above the symbols for **Skip Length**, **Crater Fill**, and **Weld Length** will light up to indicate which parameter is being programmed, or edited.

   The parameters to be set for stitch welding are:

A.	Weld Length	.1" (.1 cm) increments
B.	Crater Fill	.1 second increments
C.	Skip Length	.1" (.1 cm) increments

   NOTE: 120 VAC machines are factory set to inches per minute. 42 VAC and 240 VAC machines are factory set to centimeters per minute.

   NOTE: Load, heat or application may affect actual travel speed or distance. Minor adjustments to speed or distance settings may be necessary to obtain desired travel.

3. Set the appropriate **Weld Contact** switches to the **"ON"** position.
   (Welding Operations Only) See machine wiring diagram to wire cable connector for weld contacts.

   NOTE: Weld contacts will not close until the travel direction switch is thrown.

4. Turn the **Travel Direction** switch to the desired direction to begin the welding or cutting operation.

CONTROLS:

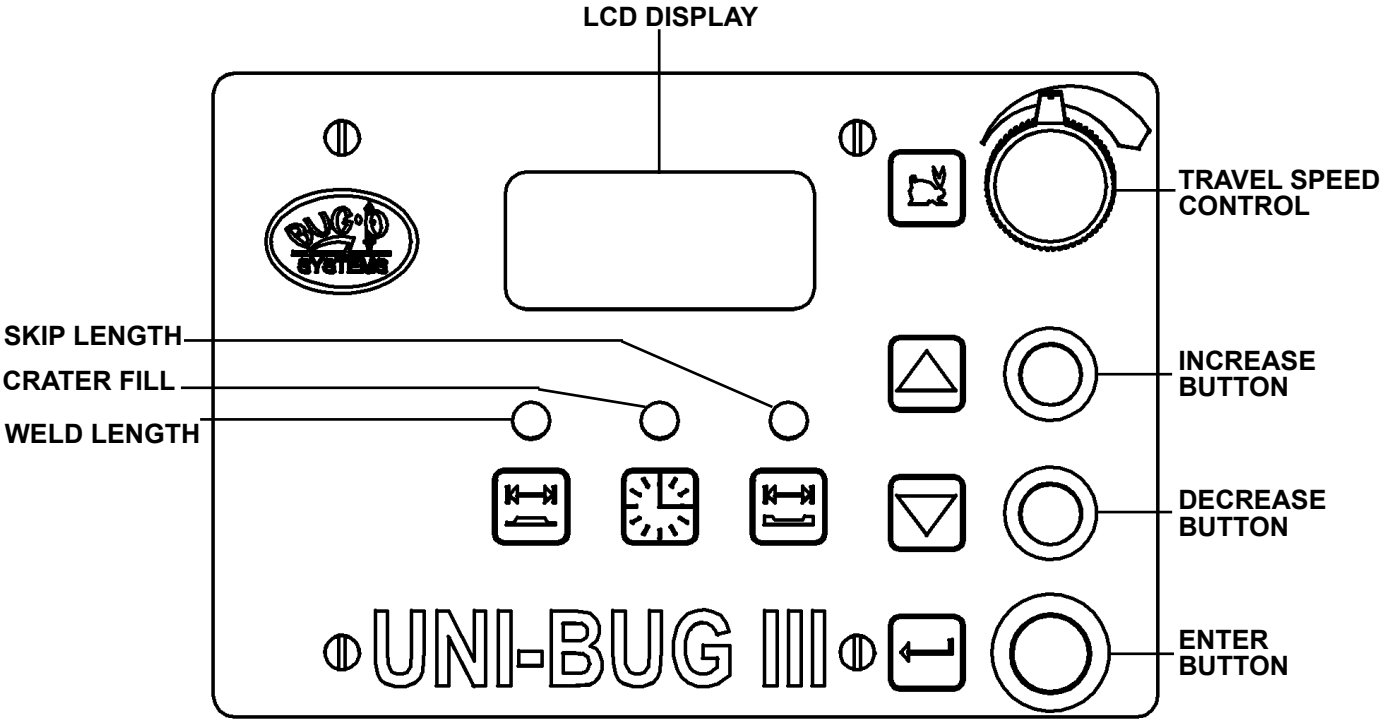
LCD DISPLAY
TRAVEL SPEED CONTROL
SKIP LENGTH
CRATER FILL
WELD LENGTH
INCREASE BUTTON
DECREASE BUTTON
UNI-BUG III
ENTER BUTTON

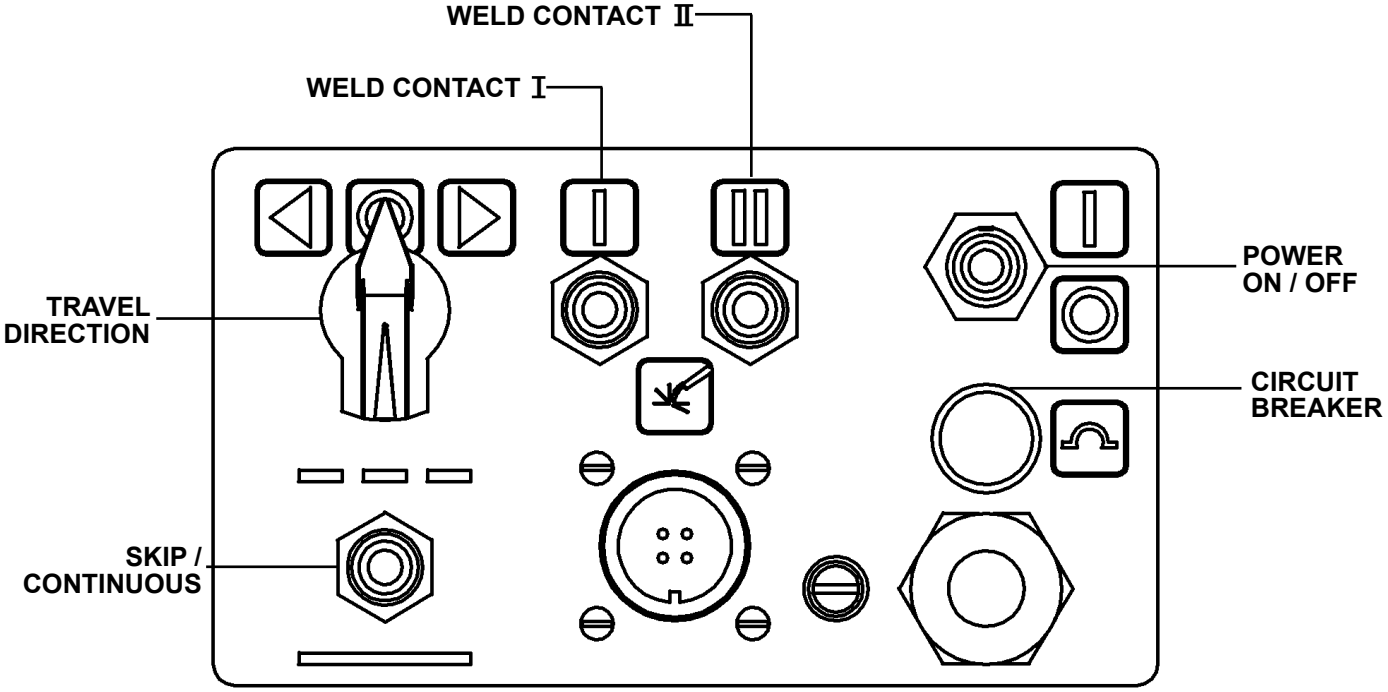
WELD CONTACT II
WELD CONTACT I
POWER ON / OFF
TRAVEL DIRECTION
CIRCUIT BREAKER
SKIP / CONTINUOUS

CONTROLS, CONTINUED:

LCD DISPLAY: Displays the programming parameters such as travel speed, skip length, crater fill, and weld length.

TRAVEL SPEED: Used to adjust the travel speed of the machine.

INCREASE BUTTON: Increases the numerical value of the selected parameter.

DECREASE BUTTON: Decreases the numerical value of the selected parameter.

ENTER BUTTON: Enters the set value into memory and toggles you to the next parameter.

SKIP LENGTH: When selected enter the value of the length of the skip distance.

CRATER FILL: When selected enter the value of the crater fill time.

WELD LENGTH: When selected enter the value of the length of the weld.

TRAVEL DIRECTION: Dictates which direction the machine will travel. Must be in the “OFF” position to program parameters.

SKIP / CONTINUOUS: Used to select either the skip or continuous welding operation.

CIRCUIT BREAKER: Provides overload protection for the machine.

POWER ON / OFF: Turns power on and off to the machine.

WELD CONTACT I: If using one welding gun, switch weld contact 1 to the “ON” position.

WELD CONTACT II: If using two welding guns, both weld contact 1 and 2 should be switched to the “ON” position.

TECHNICAL DATA: UNI-BUG III

Power Requirement:	UNI-2400	120 VAC/50-60/1
	UNI-2402	240 VAC/50-60/1
	UNI-2404	42 VAC/50-60/1
Speed Range:	4 ipm to 75 ipm (102 to 1905 mm/min)	
Maximum Stiffener Size:	2" (50.8 mm)	
Net Weight:	18 lb. (8.16 kg)	
Shipping Weight:	30 lb. (13.61 kg)	

DIMENSIONS:

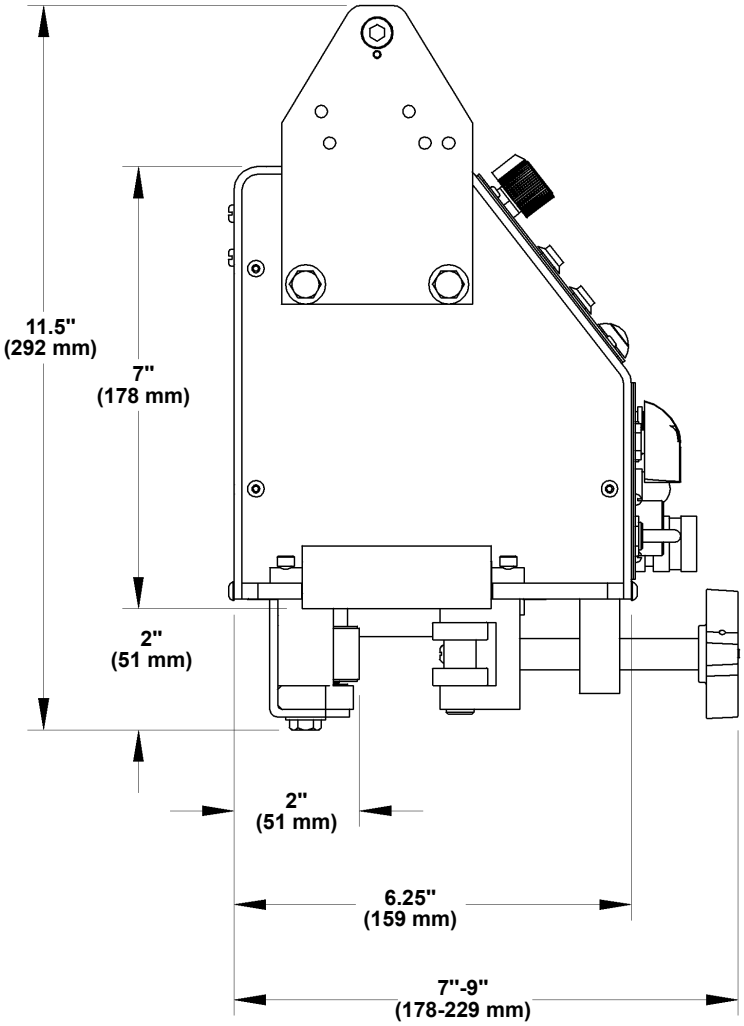

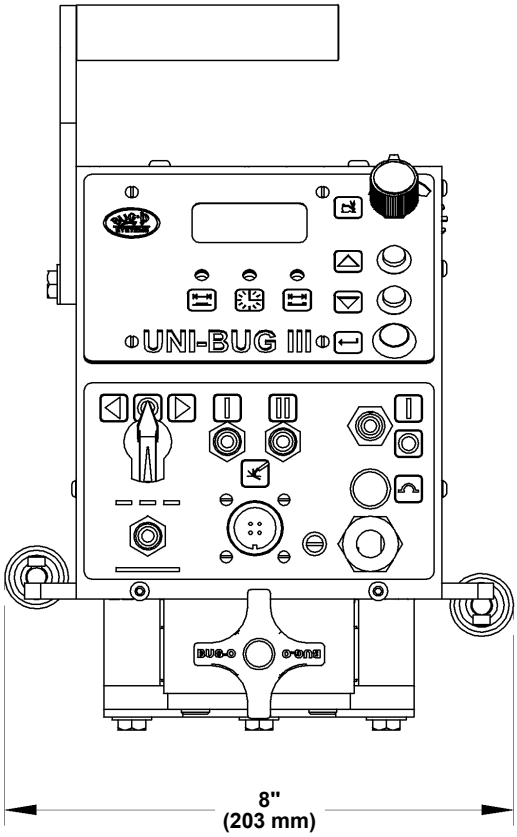

TECHNICAL DATA: UNI-BUG III BULB

Power Requirement:	UNI-2720	120 VAC/50-60/1
	UNI-2722	240 VAC/50-60/1
	UNI-2724	42 VAC/50-60/1
Speed Range:	4 ipm to 75 ipm (102 to 1905 mm/min)	
Maximum Stiffener Size:	2" (50.8 mm)	
Net Weight:	13 lbs. (5.9 kg)	
Shipping Weight:	40 lbs. (18.14 kg)	

DIMENSIONS:

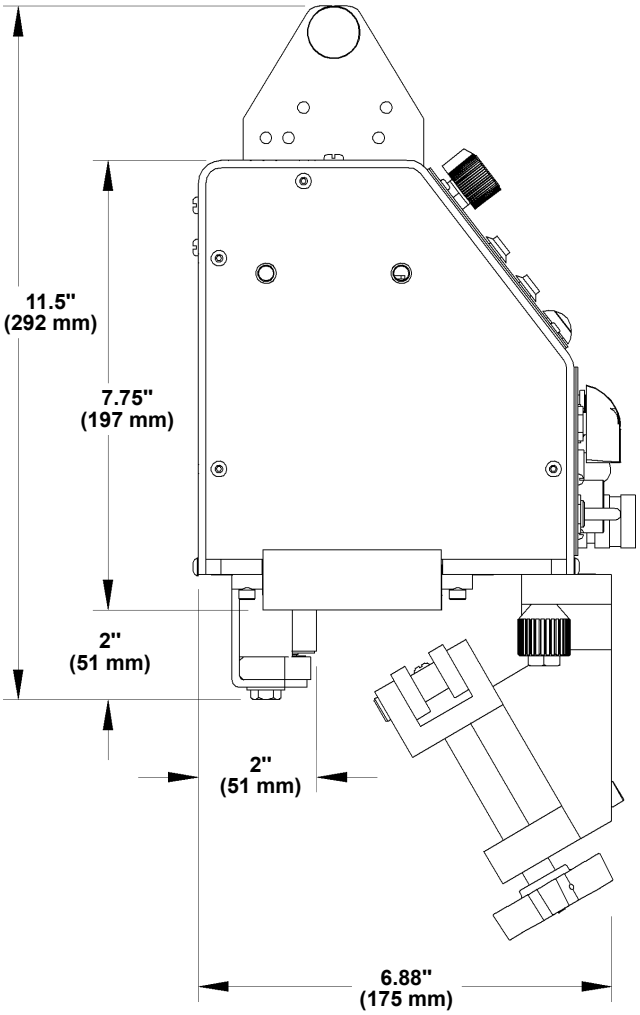

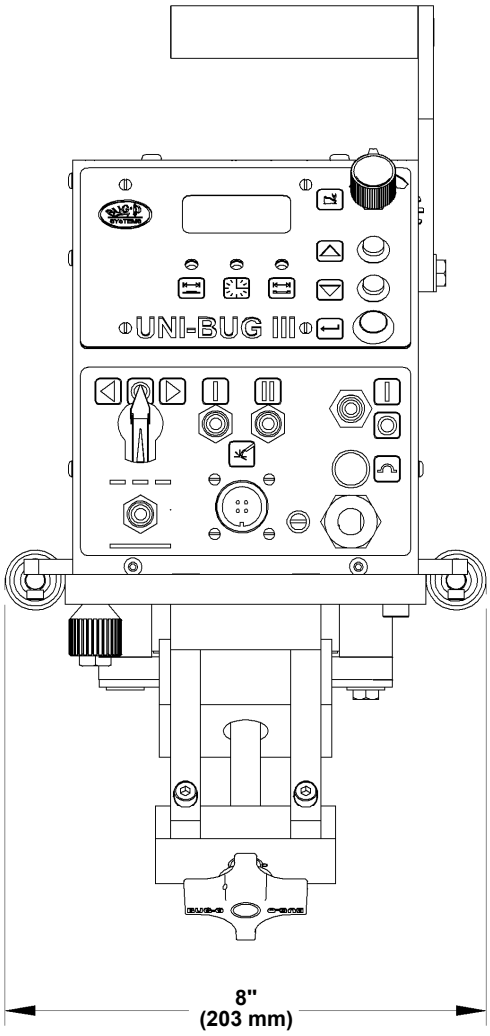

TECHNICAL DATA: UNI-BUG III “T”

Power Requirement:

UNI-2820	120 VAC/50-60/1	UNI-2840	120 VAC/50-60/1
UNI-2822	240 VAC/50-60/1	UNI-2842	240 VAC/50-60/1
UNI-2824	42 VAC/50-60/1	UNI-2844	42 VAC/50-60/1

Speed Range: 4 ipm to 75 ipm (102 to 1905 mm/min)

Maximum Stiffener Size: 2" (50.8 mm)

Net Weight: 13 lbs. (5.9 kg)

Shipping Weight: 40 lbs. (18.14 kg)

DIMENSIONS:

UNI-2820, UNI-2822 & UNI-2824

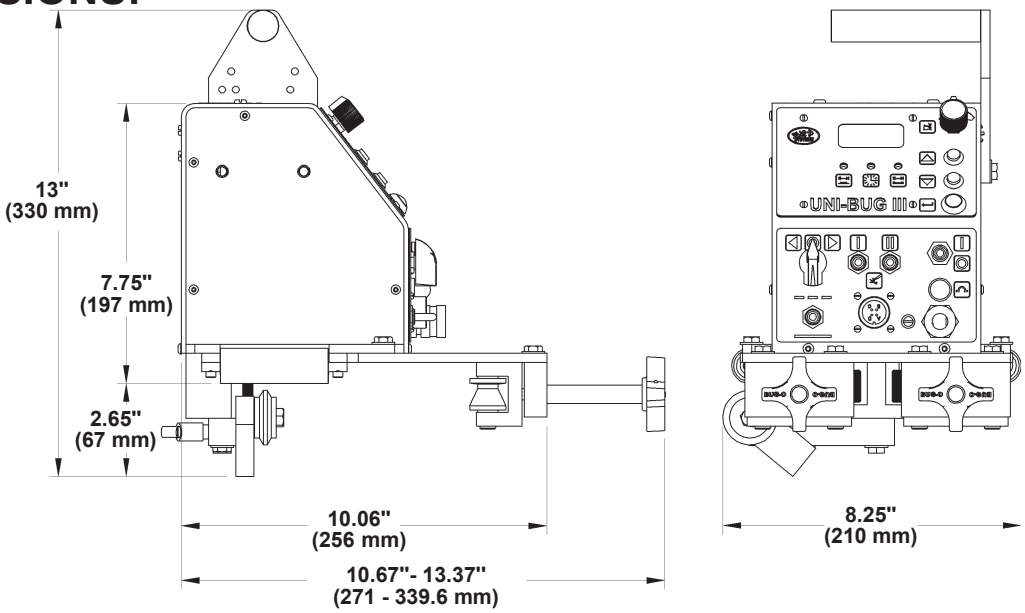

UNI-2840, UNI-2842 & UNI-2844

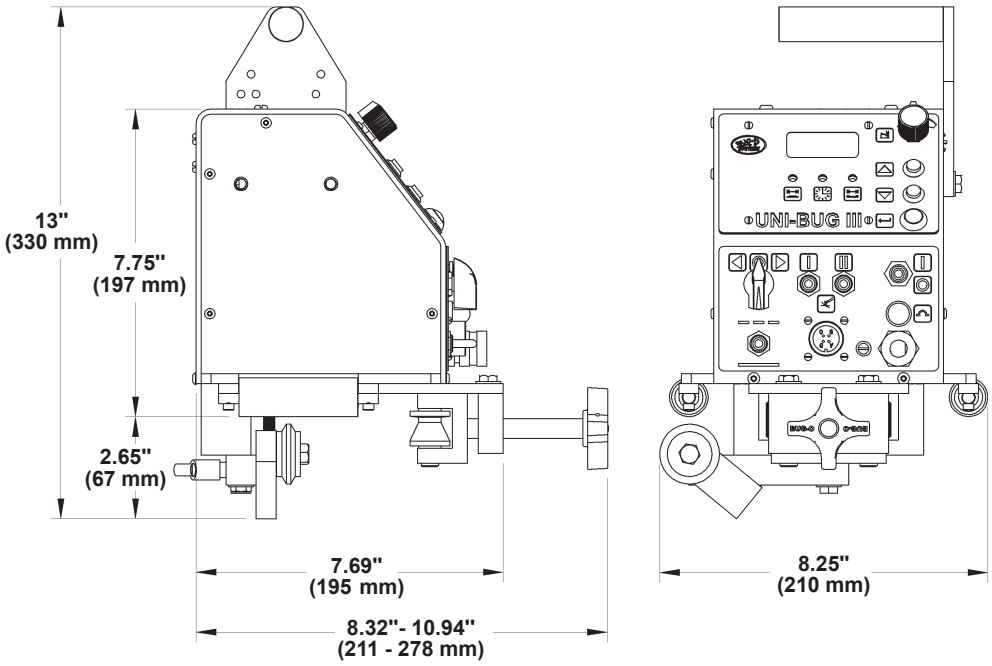

TECHNICAL DATA: UNI-BUG III “L”

Power Requirement:	UNI-2920	120 VAC/50-60/1
	UNI-2922	240 VAC/50-60/1
	UNI-2924	42 VAC/50-60/1
Speed Range:	4 ipm to 75 ipm (102 to 1905 mm/min)	
Maximum Stiffener Size:	2" (50.8 mm)	
Net Weight:	13.5 lbs. (6.12 kg)	
Shipping Weight:	40 lbs. (18.14 kg)	

DIMENSIONS:

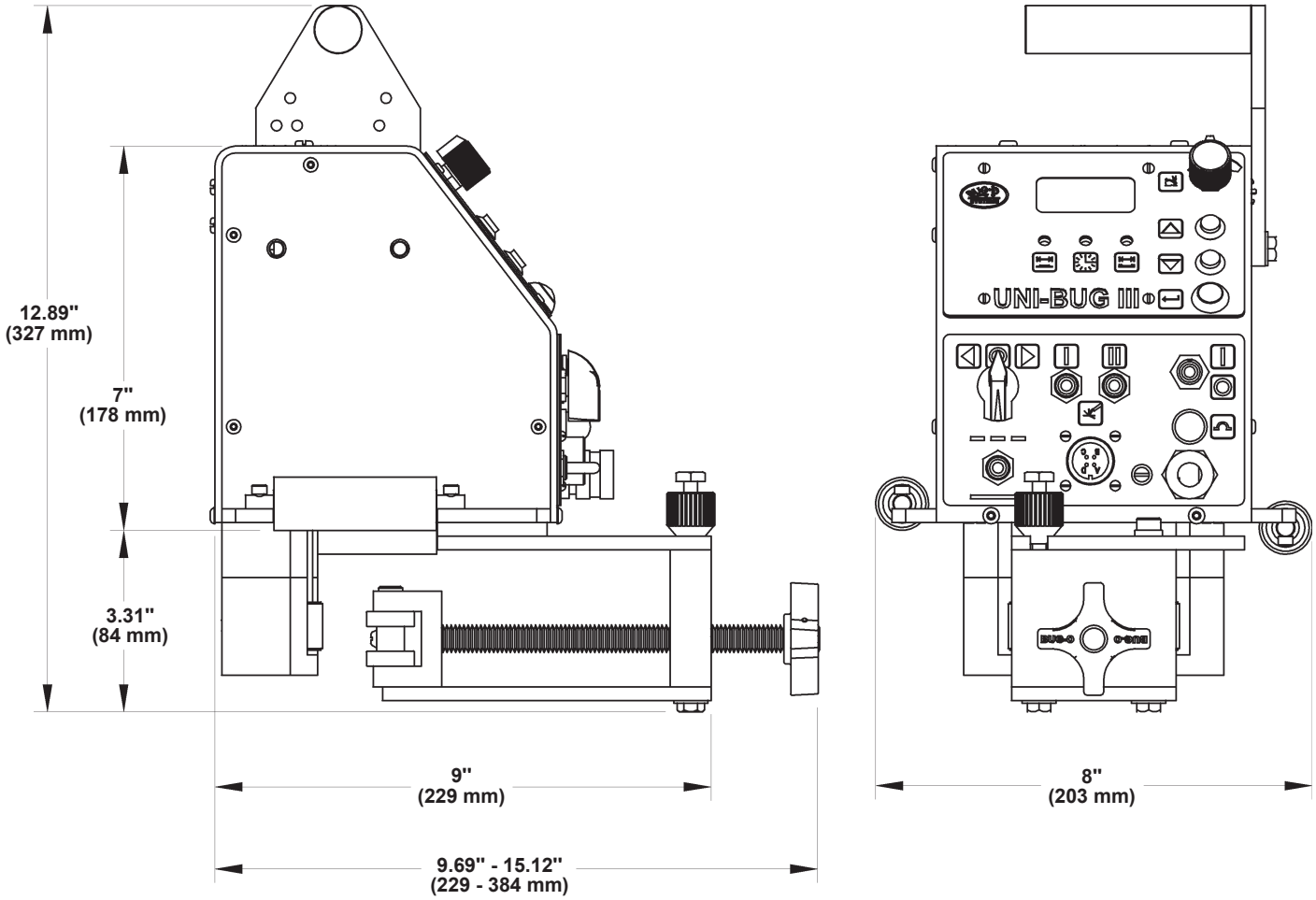

UNI-BUG III WIRING DIAGRAM / PARTS LIST

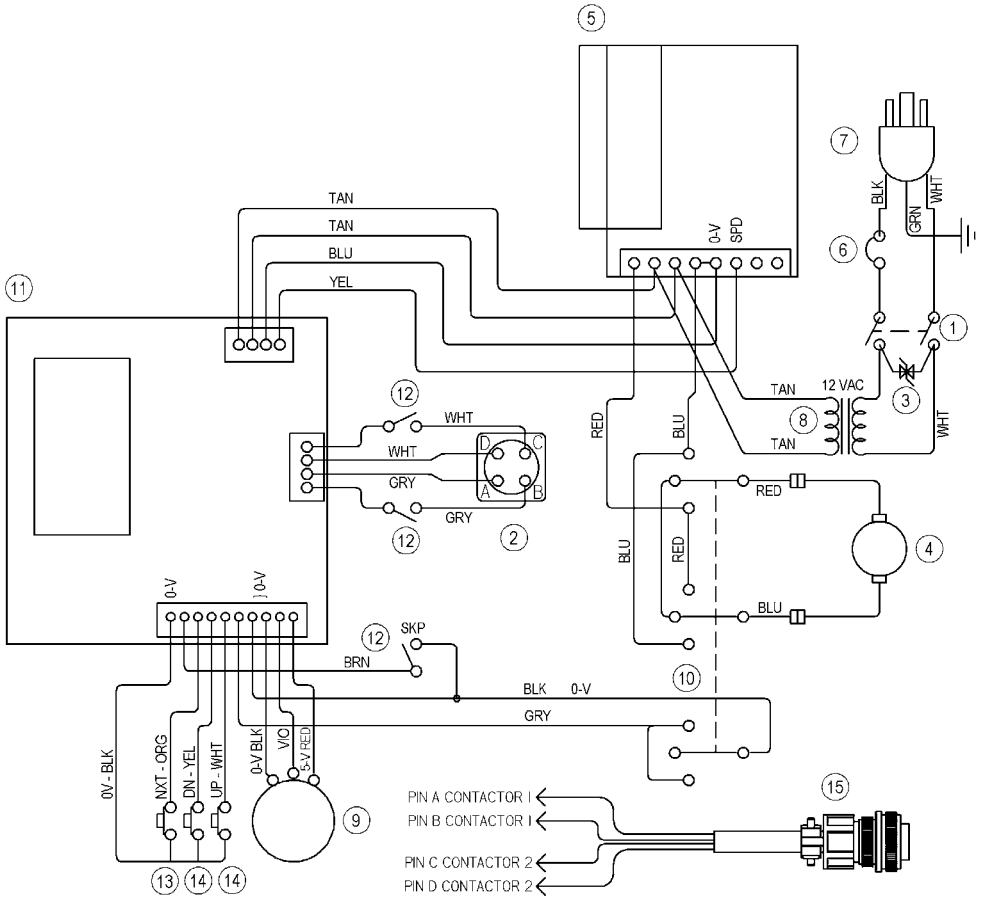

ITEM	QTY	PART NUMBER	DESCRIPTION
1	1	ARM-2279	Toggle Switch
2	1	BUG-1034	Panel Connector
3*	1	BUG-1393	Volt Trap 120 VAC
3**	1	BUG-1563	Volt Trap 240 VAC
3***	1	BUG-1393	Volt Trap 120 VAC
4	1	BUG-1550	Gear Motor 150:1
5	1	BUG-1735	Speed Control
6*	1	BUG-2923	.7 Amp Circuit Breaker
6**	1	BUG-2952	.5 Amp Circuit Breaker
6***	1	BUG-2933	2 Amp Circuit Breaker
7*	1	BUG-9445	Power Cord
7**	1	GOF-3115	Power Cord
7***	1	BUG-9442	Power Cord
8*	1	BUG-9675	Transformer
8**	1	GOF-3112	Transformer
8***	1	BUG-1466	Transformer
9	1	BUG-9677	Potentiometer
10	1	MUG-1258	Rotary Switch
11	1	PCB-2400	Stitch Board
12	3	SWT-7101	Toggle Switch
13	1	SWT-1111	NOR. Open Push Button
14	2	SWT-3502	NOR. Open Push Button
15	1	BUG-1035	Cable Connector

* 120 VAC Part Number
** 240 VAC Part Number
*** 42 VAC Part Number

UNI-BUG III SINGLE GUN WELDING KIT

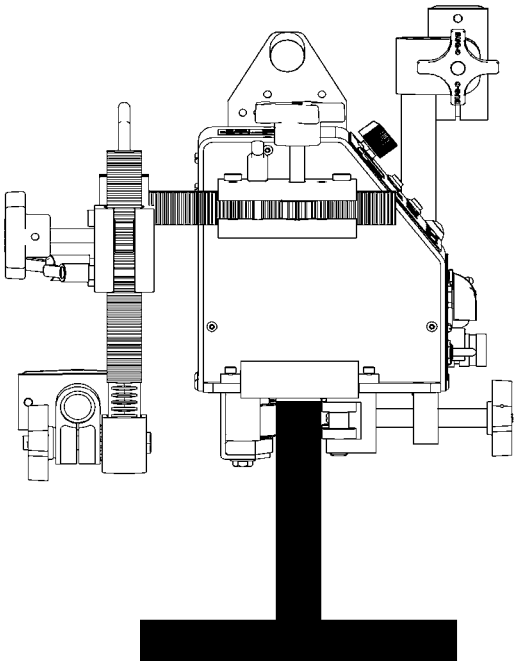

UNI-2500, 2502, 2504

The UNI-2500 UNI-BUG III Single Gun Kit is equipped for the mounting of a single gun and provides components to manually adjust the gun in the vertical and horizontal plane. The UNI-BUG III provides programmable control for stitch or continuous welding and is designed to mount and run on the top edge of a flat bar or stiffener with a minimum height of 2" (51 mm) and a maximum width of 2" (51 mm). The machine will turn on a radius down to 6" (160 mm). The unit will travel at speeds from 4 to 75 inches per minute (102 - 1905 mm/min) and has a horizontal load capacity of 50 lbs. (22.7 kg).

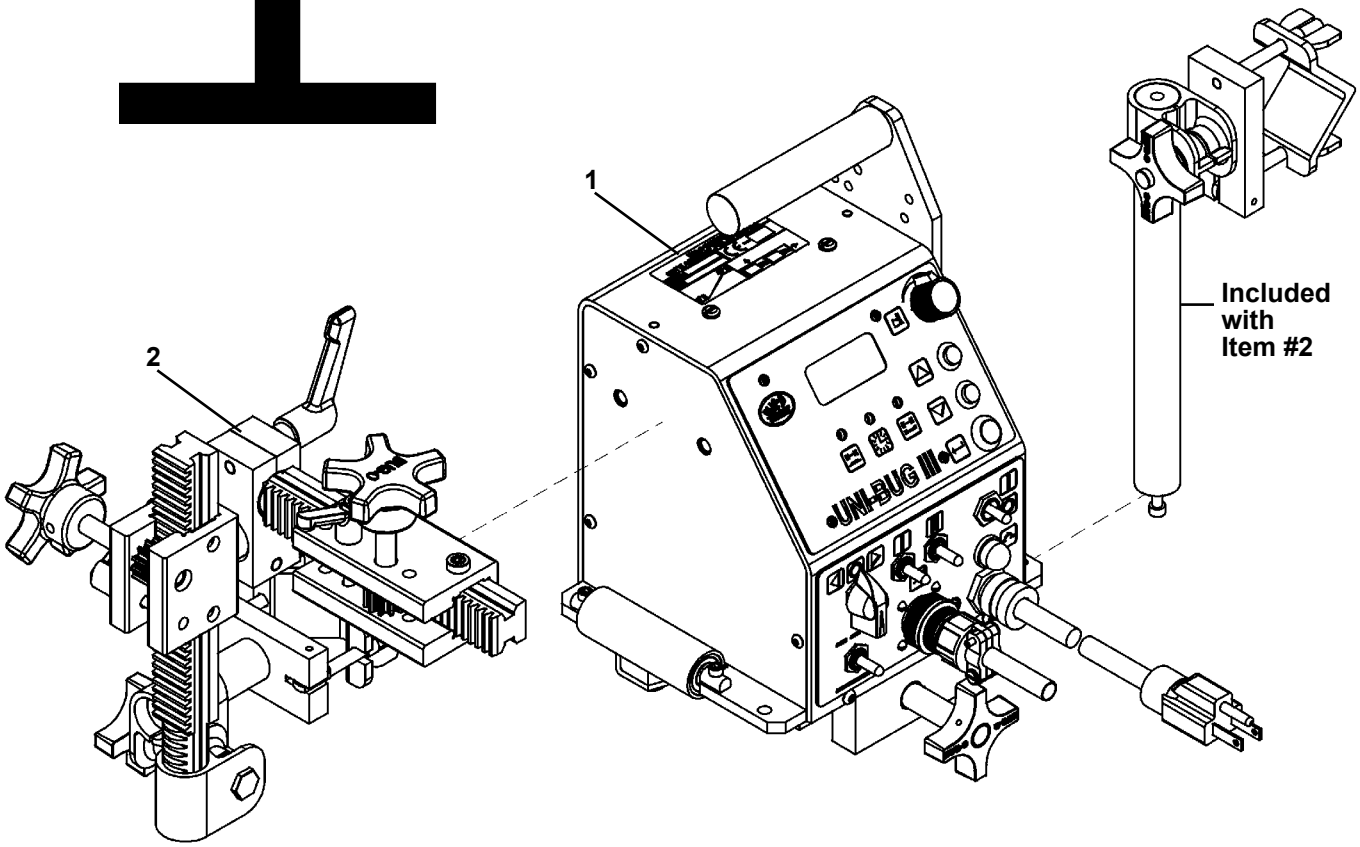

ITEM	QTY	PART NUMBER	DESCRIPTION
1	1	UNI-2400	UNI-BUG III 120 VAC
1	1	UNI-2402	UNI-BUG III 240 VAC
1	1	UNI-2404	UNI-BUG III 42 VAC
2	1	UNI-1855	UNI-BUG Welding Group

UNI-BUG III DUAL GUN WELDING KIT

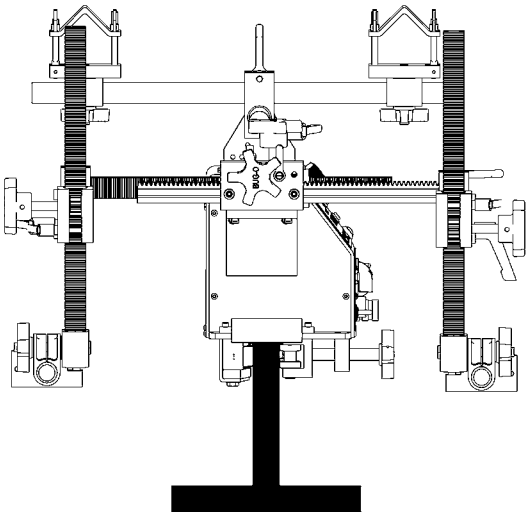

UNI-2600, 2602, 2604

The UNI-2600 UNI-BUG III Dual Gun Welding Kit is equipped for the mounting of two welding guns and provides components to independently adjust either gun in the vertical and horizontal plane. The unit features programmable control for stitch or continuous welding and is designed to mount and run on the top edge of a flat bar or stiffener with a minimum height of 2" (51 mm) and a maximum width of 2" (51 mm). The machine will turn on a radius down to 6" (152 mm). The unit will travel at speeds from 4 to 75 inches per minute (102-1905 mm/min) and has a horizontal load capacity of 50 lbs. (22.7 kg).

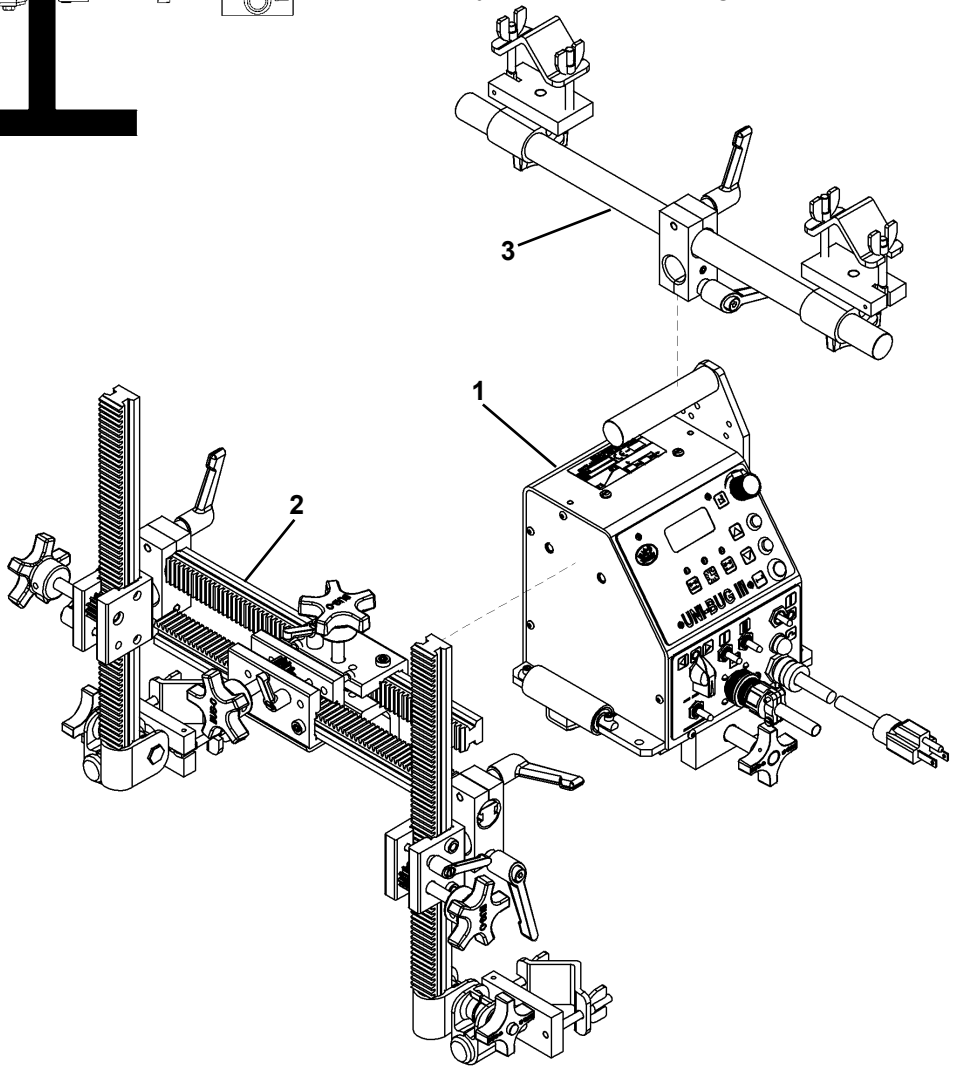

ITEM	QTY	PART NUMBER	DESCRIPTION
1	1	UNI-2400	UNI-BUG III 120 VAC
1	1	UNI-2402	UNI-BUG III 240 VAC
1	1	UNI-2404	UNI-BUG III 42 VAC
2	1	UNI-1350	UNI-BUG Dual Welding Group
3	1	UNI-1355	Dual Cable Anchor

UNI-BUG III BULB DUAL GUN WELDING KIT

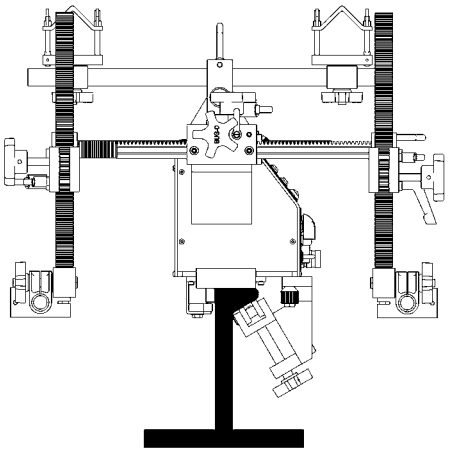

UNI-2700, 2702, 2704

The UNI-2700 UNI-BUG III Dual Gun Bulb Profile Welding Kit is equipped for the mounting of two welding guns and provides components to independently adjust either gun in the vertical and horizontal plane. The unit features programmable control for stitch or continuous welding and is designed for straight line welding of Bulb Profiles. This unit will mount and run on Bulb sizes from 5.5" to 17" (140 mm to 430 mm). The unit will travel at speeds from 4 to 75 inches per minute (102-1905 mm/min) and has a horizontal load capacity of 50 lbs. (22.7 kg).

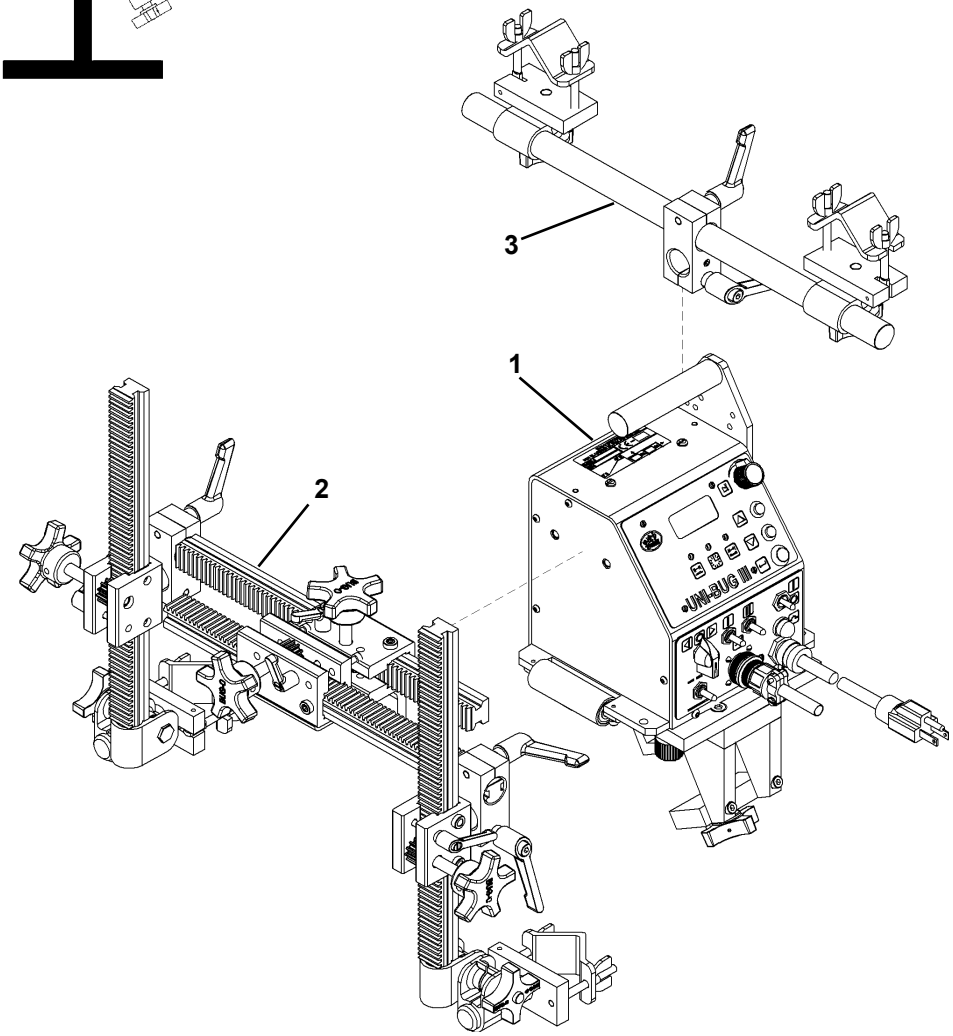

ITEM	QTY	PART NUMBER	DESCRIPTION
1	1	UNI-2720	UNI-BUG III Bulb120 VAC
1	1	UNI-2722	UNI-BUG III Bulb 240 VAC
1	1	UNI-2724	UNI-BUG III Bulb 42 VAC
2	1	UNI-1350	UNI-BUG Dual Welding Group
3	1	UNI-1355	Dual Cable Anchor

UNI-BUG III “T” DUAL GUN WELDING KIT

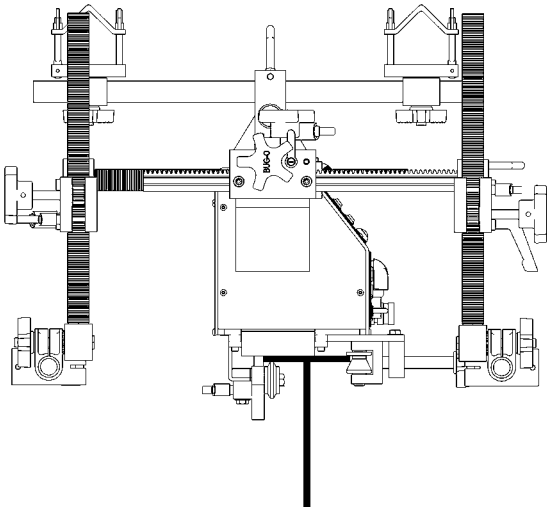

UNI-2800-4, 2802-4, 2804-4

The UNI-2800-4 UNI-BUG III Dual Gun “T” Profile Welding Kit is equipped for the mounting of two welding guns and provides components to independently adjust either gun in the vertical and horizontal plane. The unit features programmable control for stitch or continuous welding and is designed for straight line welding of “T” Profiles. This unit will mount and run on top of “T” Profiles with a minimum height of 2" (51 mm) and widths from 2"-4" (51-102 mm). The unit will travel at speeds from 4 to 75 inches per minute (102-1905 mm/min) and has a horizontal load capacity of 50 lbs. (22.7 kg).

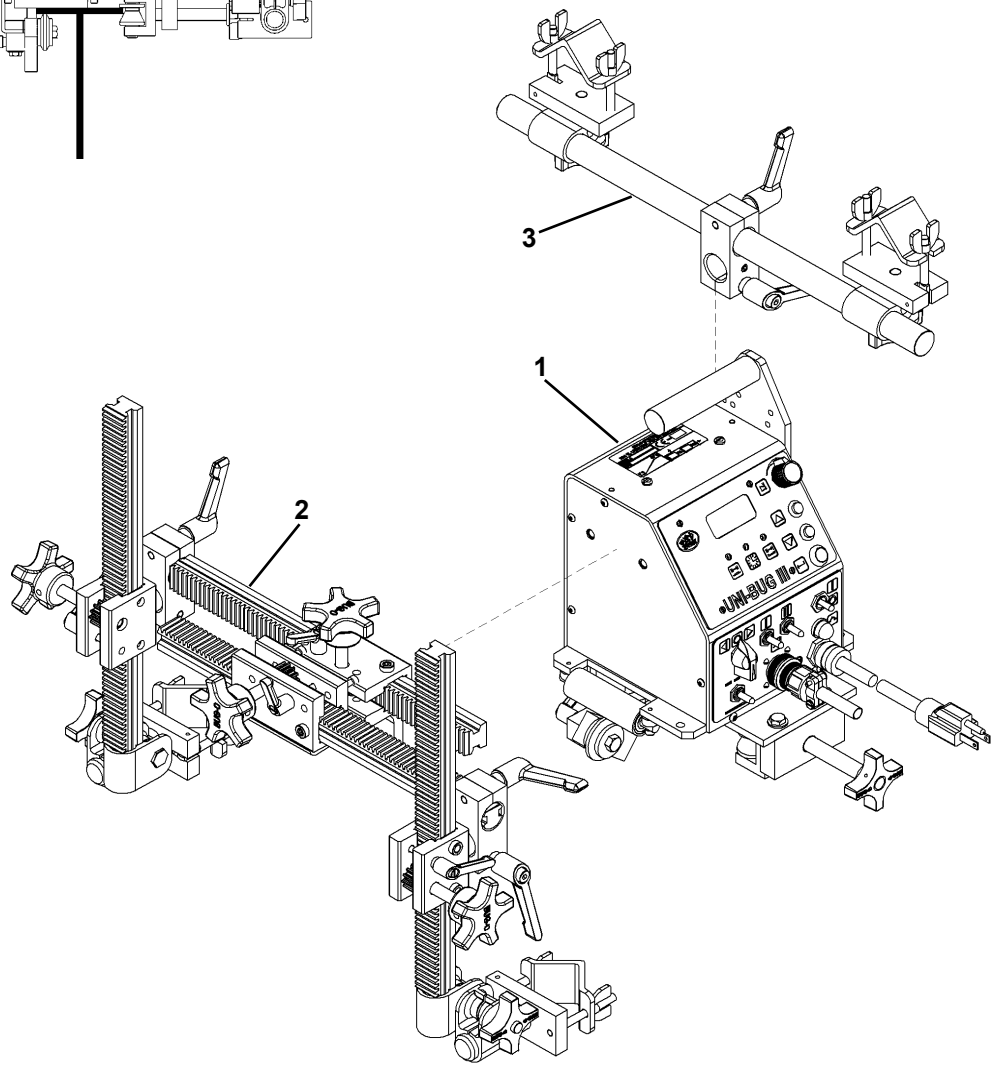

ITEM	QTY	PART NUMBER	DESCRIPTION
1	1	UNI-2840	UNI-BUG III 2"-4" “T” 120 VAC
1	1	UNI-2842	UNI-BUG III 2"-4" “T” 220 VAC
1	1	UNI-2844	UNI-BUG III 2"-4" “T” 42 VAC
2	1	UNI-1350	UNI-BUG Dual Welding Group
3	1	UNI-1355	Dual Cable Anchor

UNI-BUG III “T” DUAL GUN WELDING KIT

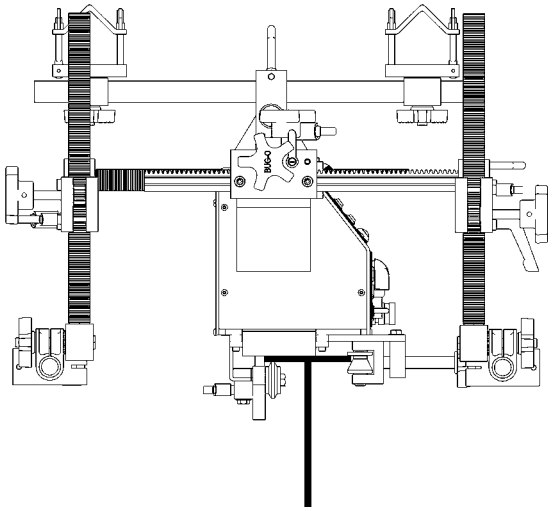

UNI-2800-6, 2802-6, 2804-6

The UNI-2800-6 UNI-BUG III Dual Gun “T” Profile Welding Kit is equipped for the mounting of two welding guns and provides components to independently adjust either gun in the vertical and horizontal plane. The unit features programmable control for stitch or continuous welding and is designed for straight line welding of “T” Profiles. This unit will mount and run on top of “T” Profiles with a minimum height of 2" (51 mm) and widths from 4"-6" (102-152 mm). The unit will travel at speeds from 4 to 75 inches per minute (102-1905 mm/min) and has a horizontal load capacity of 50 lbs. (22.7 kg).

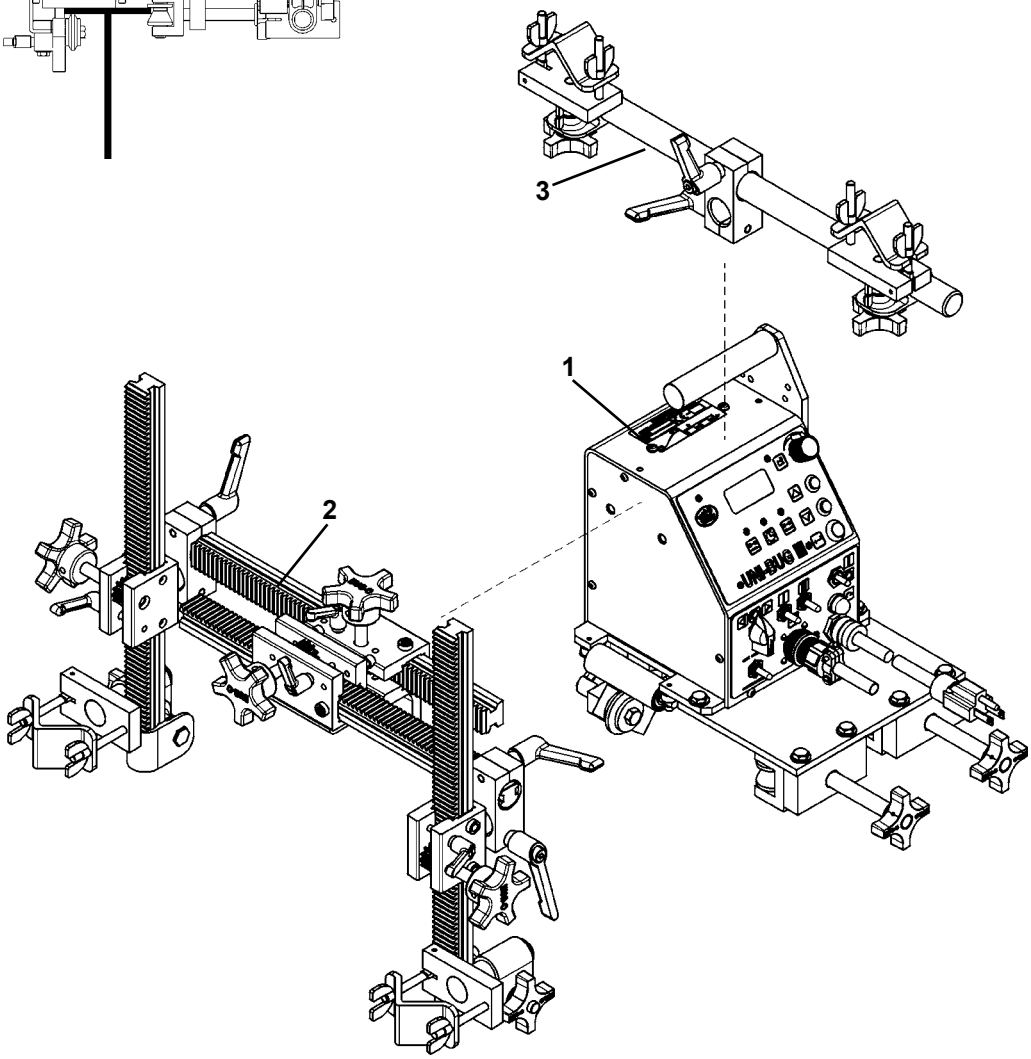

ITEM	QTY	PART NUMBER	DESCRIPTION
1	1	UNI-2820	UNI-BUG III “T” 120 VAC
1	1	UNI-2822	UNI-BUG III “T” 240 VAC
1	1	UNI-2824	UNI-BUG III “T” 42 VAC
2	1	UNI-1350	UNI-BUG Dual Welding Group
3	1	UNI-1355	Dual Cable Anchor

UNI-BUG III “L” DUAL GUN WELDING KIT

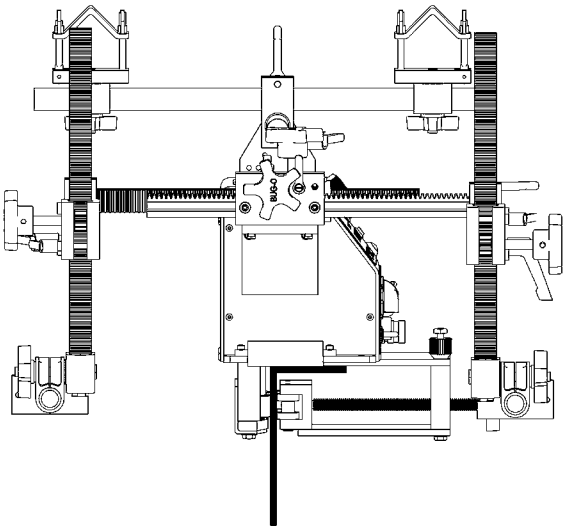

UNI-2900, 2902, 2904

The UNI-2900 UNI-BUG III Dual Gun “L” Profile Welding Kit is equipped for the mounting of two welding guns and provides components to independently adjust either gun in the vertical and horizontal plane. The unit features programmable control for stitch or continuous welding and is designed for straight line welding of “L” Profiles. The unit will mount and run on top of inverted “L” Profiles or angle with a minimum height of 4" (102 mm) and widths up to 4" (102 mm). The unit will travel at speeds from 4 to 75 inches per minute (102 - 1905 mm/min) and has a horizontal load capacity of 50 lbs. (22.7 kg).

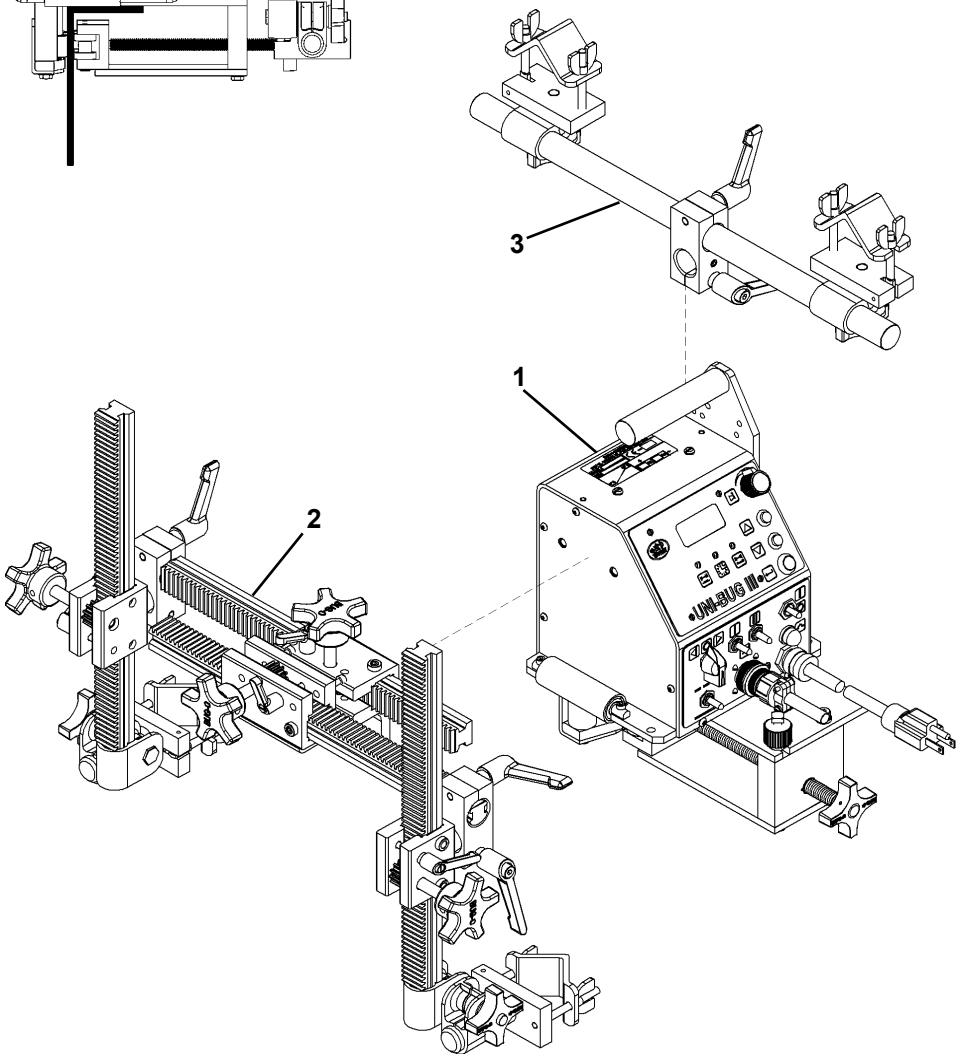

ITEM	QTY	PART NUMBER	DESCRIPTION
1	1	UNI-2920	UNI-BUG III “L” 120 VAC
1	1	UNI-2922	UNI-BUG III “L” 240 VAC
1	1	UNI-2924	UNI-BUG III “L” 42 VAC
2	1	UNI-1350	UNI-BUG Dual Welding Group
3	1	UNI-1355	Dual Cable Anchor

UNI-2400 UNI-BUG III / EXPLODED VIEW / PARTS LIST

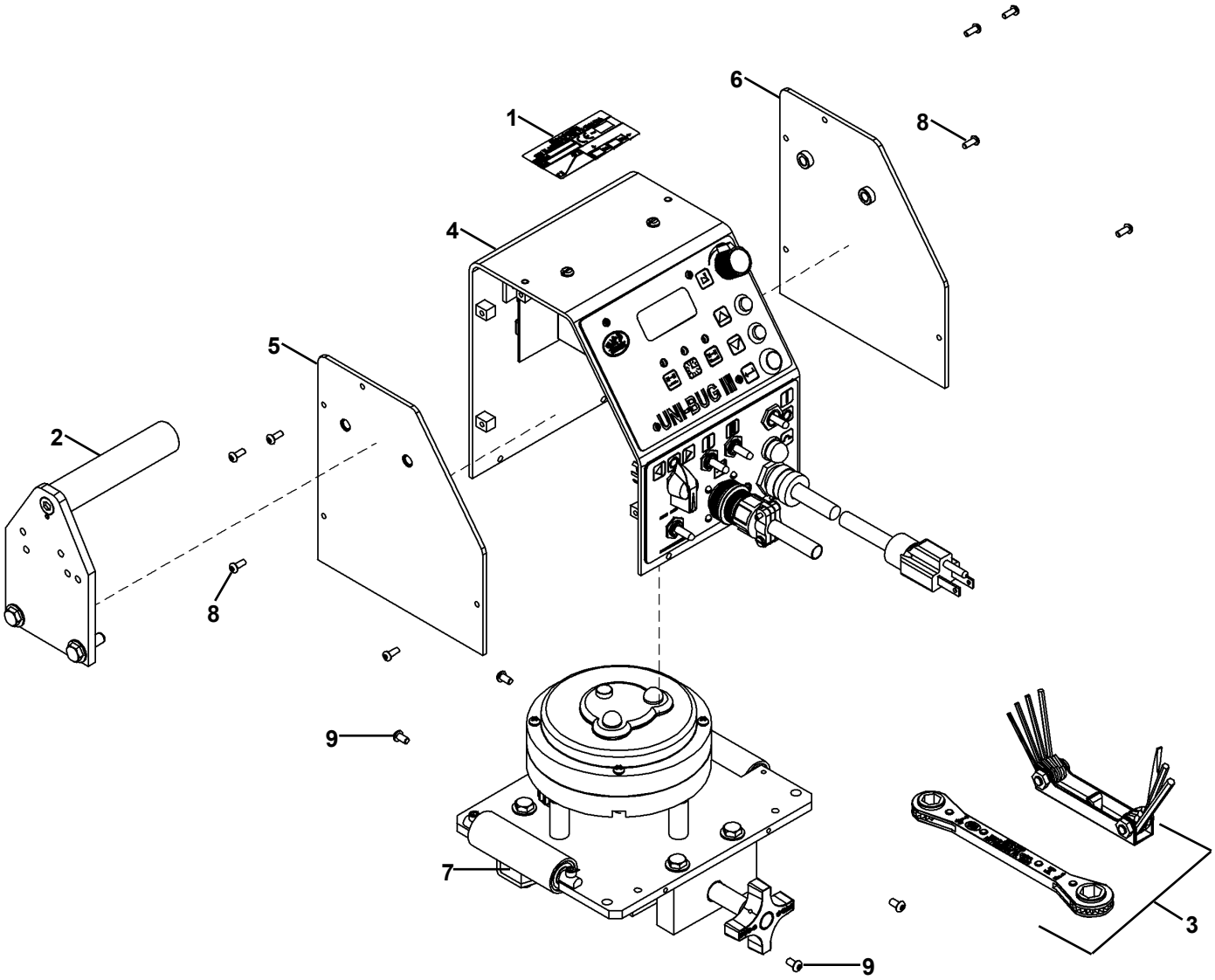

ITEM	QTY	PART NUMBER	DESCRIPTION
1	1	BUG-1338	Name Plate
2	1	BUG-1785	Handle
3	1	BUG-9444	Tool Kit
4	1	UNI-2410	Cover Assy. 120 VAC
4	1	UNI-2412	Cover Assy. 240 VAC
4	1	UNI-2414	Cover Assy. 42 VAC
5	1	UNI-2417	Left Side Panel
6	1	UNI-2418	Right Side Panel
7	1	UNI-1020	Base Assy.
8	8	FAS-1214	But. Hd. Sk Scr 6-32 x 3/8"
9	4	FAS-1223	But. Hd. Sk Scr 8-32 x 5/16"

UNI-2410 COVER ASSEMBLY / EXPLODED VIEW

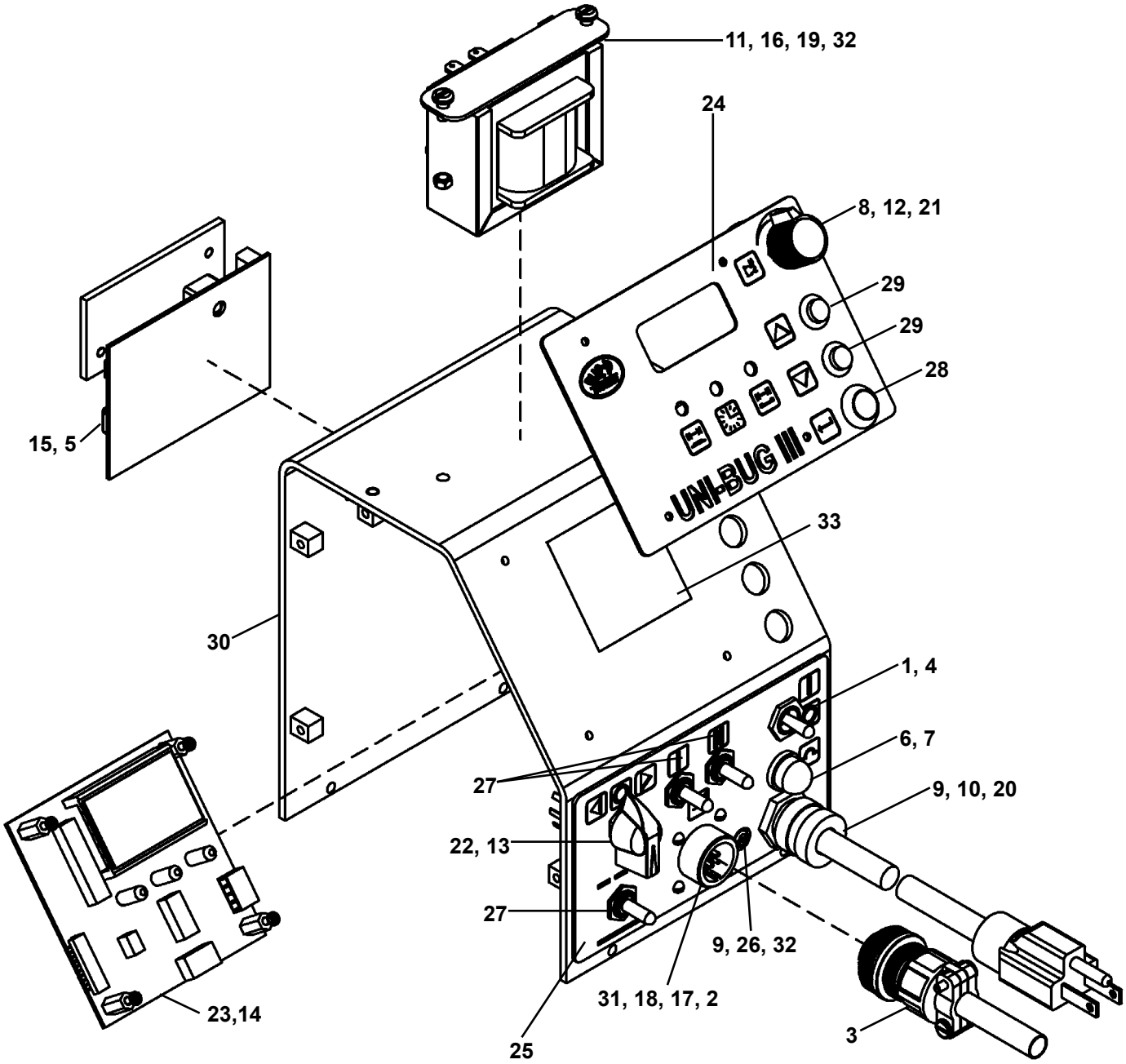

NOTE: See UNI-BUG III wiring diagram for voltage specific electrical components.

UNI-2410 COVER ASSEMBLY / PARTS LIST

ITEM	QTY	PART NUMBER	DESCRIPTION
1	1	ARM-2279	Toggle Switch
2	1	BUG-1034	Panel Connector
3	1	BUG-1035	Cable Connector
4	1	BUG-1393	Volt Trap 120 VAC
5	1	BUG-1735	Speed Control
6	1	BUG-2923	.7 AMP Circuit Breaker
7	1	BUG-2924	Reset Seal
8	1	BUG-5759	Pot Shaft Seal
9	1	BUG-9445	Power Cord
10	1	BUG-9446	Cord Grip
11	1	BUG-9675	Transformer
12	1	BUG-9677	Potentiometer
13	1	BUG-9694	Knob
14	4	FAS-0104	Pan Hd Scr 4-40 x 3/8"
15	2	FAS-0112	Pan Hd Slt Scr 6-32 x 1/4"
16	2	FAS-0124	Pan Hd Scr 8-32 x 3/8"
17	4	FAS-0205	Rnd Hd Scr 4-40 x 1/2"
18	4	FAS-1305	Hex Nut 4-40
19	3	FAS-1320	Hex Nut 8-32
20	1	FAS-3150	Nut, Cord Grip
21	1	MDS-1044	Knob - Yellow
22	1	MUG-1258	Rotary Switch
23	1	PCB-2400	Stitch Board
24	1	PLT-2400-A	Face Plate #1
25	1	PLT-2400-B	Face Plate #2
26	1	SCW WTE 0514	Pan Hd Scr 8-32 x 3/8"
27	3	SWT-7101	Toggle Switch
28	1	SWT-1111	Nor. Open Push Button
29	2	SWT-3502	Nor. Open Push Button
30	1	UNI-2416	Cover Panel
31	4	WAS-0201	#4 INT Star Lock Washer
32	3	WAS-0221	#8 INT Star Lock Washer
33	1	PLT-2401	UNI-BUG-III Display Filter

NOTE: See UNI-BUG III wiring diagram for voltage specific electrical components.

UNI-2720 UNI-BUG III BULB / EXPLODED VIEW / PARTS LIST

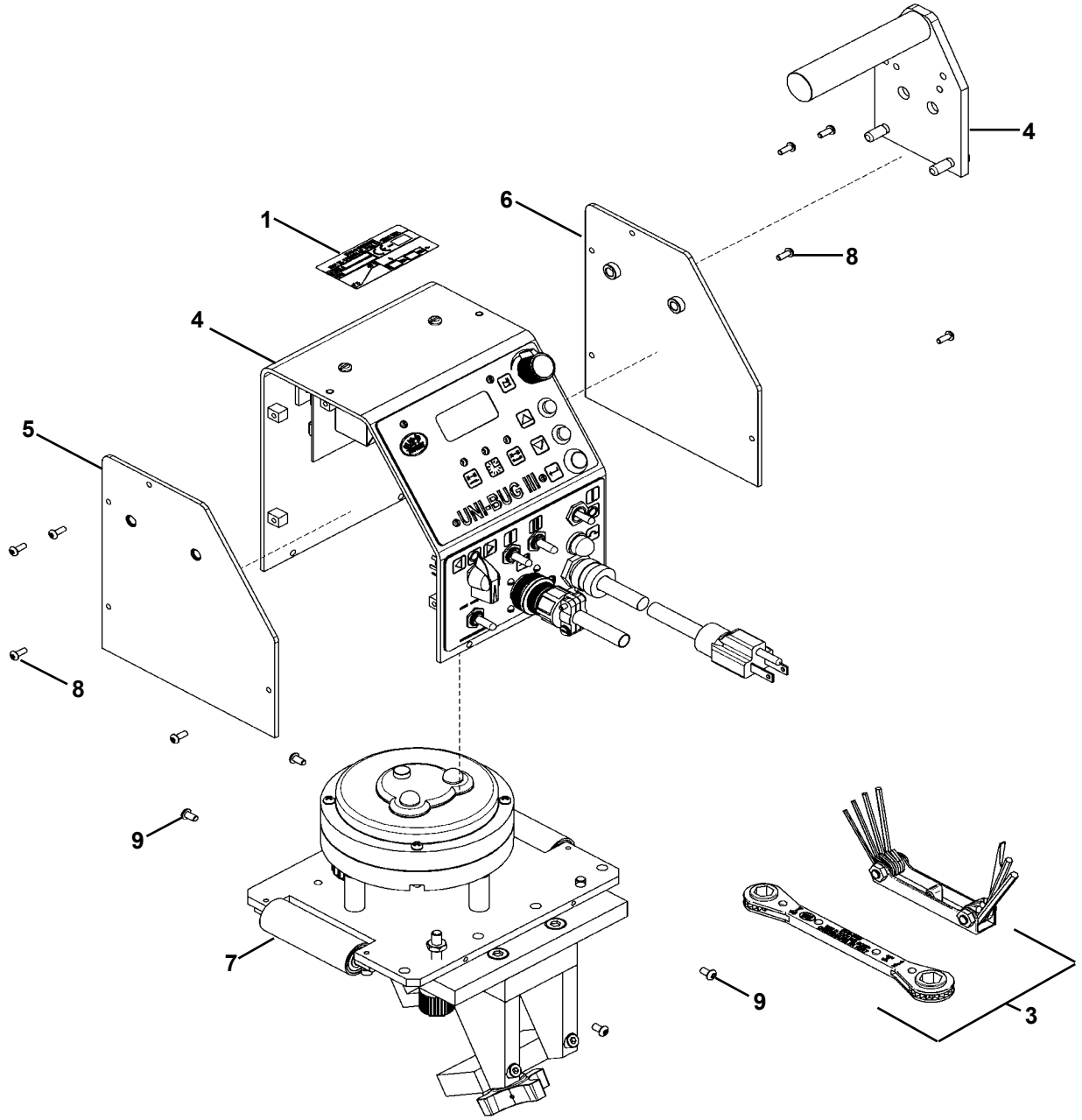

ITEM	QTY	PART NUMBER	DESCRIPTION
1	1	BUG-1338	Name Plate
2	1	BUG-1785	Handle
3	1	BUG-9444	Tool Kit
4	1	UNI-2410	Cover Assy. 120 VAC
4	1	UNI-2412	Cover Assy. 240 VAC
4	1	UNI-2414	Cover Assy. 42 VAC
5	1	UNI-2417	Left Side Panel
6	1	UNI-2418	Right Side Panel
7	1	UNI-2220	Bulb Base Assy.
8	8	FAS-1214	But. Hd. Sk Scr 6-32 x 3/8"
9	4	FAS-1223	But. Hd. Sk Scr 8-32 x 5/16"

UNI-2820 UNI-BUG III “T” / EXPLODED VIEW / PARTS LIST

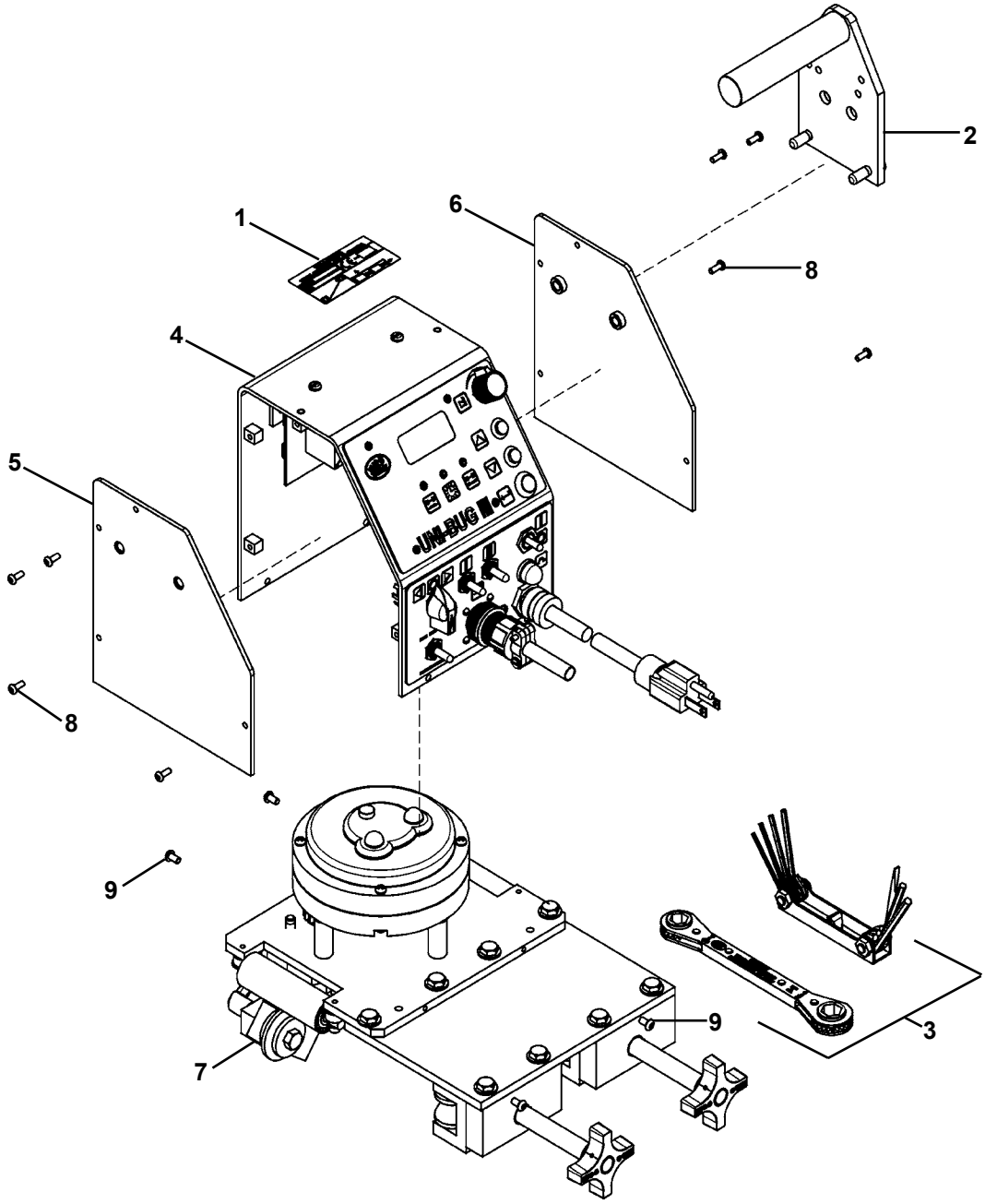

ITEM	QTY	PART NUMBER	DESCRIPTION
1	1	BUG-1338	Name Plate
2	1	BUG-1785	Handle
3	1	BUG-9444	Tool Kit
4	1	UNI-2410	Cover Assy. 120 VAC
4	1	UNI-2412	Cover Assy. 240 VAC
4	1	UNI-2414	Cover Assy. 42 VAC
5	1	UNI-2417	Left Side Panel
6	1	UNI-2418	Right Side Panel
7	1	UNI-2120	“T” Base Assy.
8	8	FAS-1214	But. Hd. Sk Scr 6-32 x 3/8"
9	4	FAS-1223	But. Hd. Sk Scr 8-32 x 5/16"

UNI-2840 UNI-BUG III “T” / EXPLODED VIEW / PARTS LIST

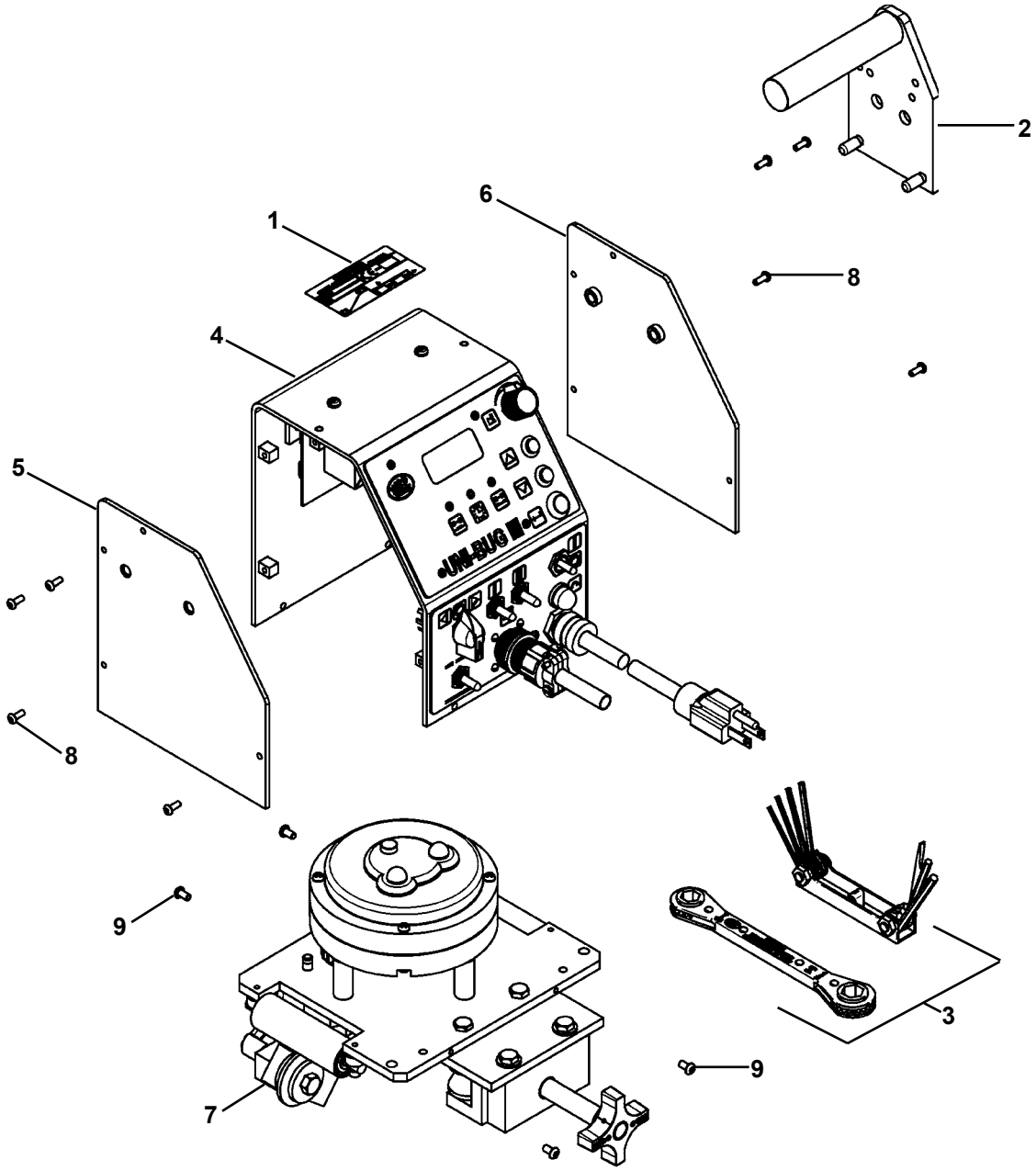

ITEM	QTY	PART NUMBER	DESCRIPTION
1	1	BUG-1338	Name Plate
2	1	BUG-1785	Handle
3	1	BUG-9444	Tool Kit
4	1	UNI-2410	Cover Assy. 120 VAC
4	1	UNI-2412	Cover Assy. 240 VAC
4	1	UNI-2414	Cover Assy. 42 VAC
5	1	UNI-2417	Left Side Panel
6	1	UNI-2418	Right Side Panel
7	1	UNI-2140	2"-4" “T” Stiffener Base Assy.
8	8	FAS-1214	But. Hd. Sk Scr 6-32 x 3/8"
9	4	FAS-1223	But. Hd. Sk Scr 8-32 x 5/16"

UNI-2920 UNI-BUG “L” / EXPLODED VIEW / PARTS LIST

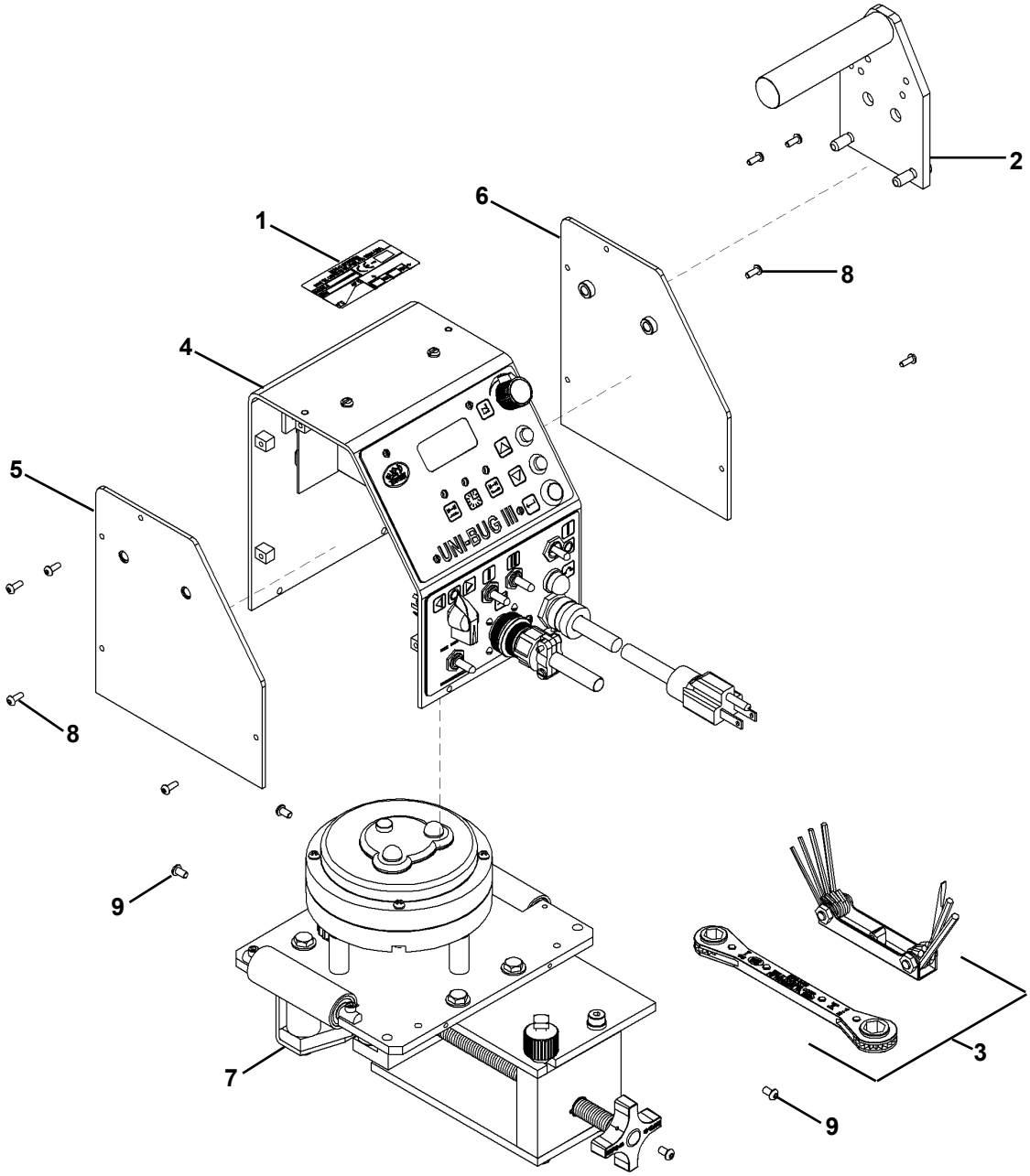

ITEM	QTY	PART NUMBER	DESCRIPTION
1	1	BUG-1338	Name Plate
2	1	BUG-1785	Handle
3	1	BUG-9444	Tool Kit
4	1	UNI-2410	Cover Assy. 120 VAC
4	1	UNI-2412	Cover Assy. 240 VAC
4	1	UNI-2414	Cover Assy. 42 VAC
5	1	UNI-2417	Left Side Panel
6	1	UNI-2418	Right Side Panel
7	1	UNI-2020	“L” Base Assy.
8	8	FAS-1214	But. Hd. Sk Scr 6-32 x 3/8"
9	4	FAS-1223	But. Hd. Sk Scr 8-32 x 5/16"

UNI-1020 BASE ASSEMBLY / EXPLODED VIEW

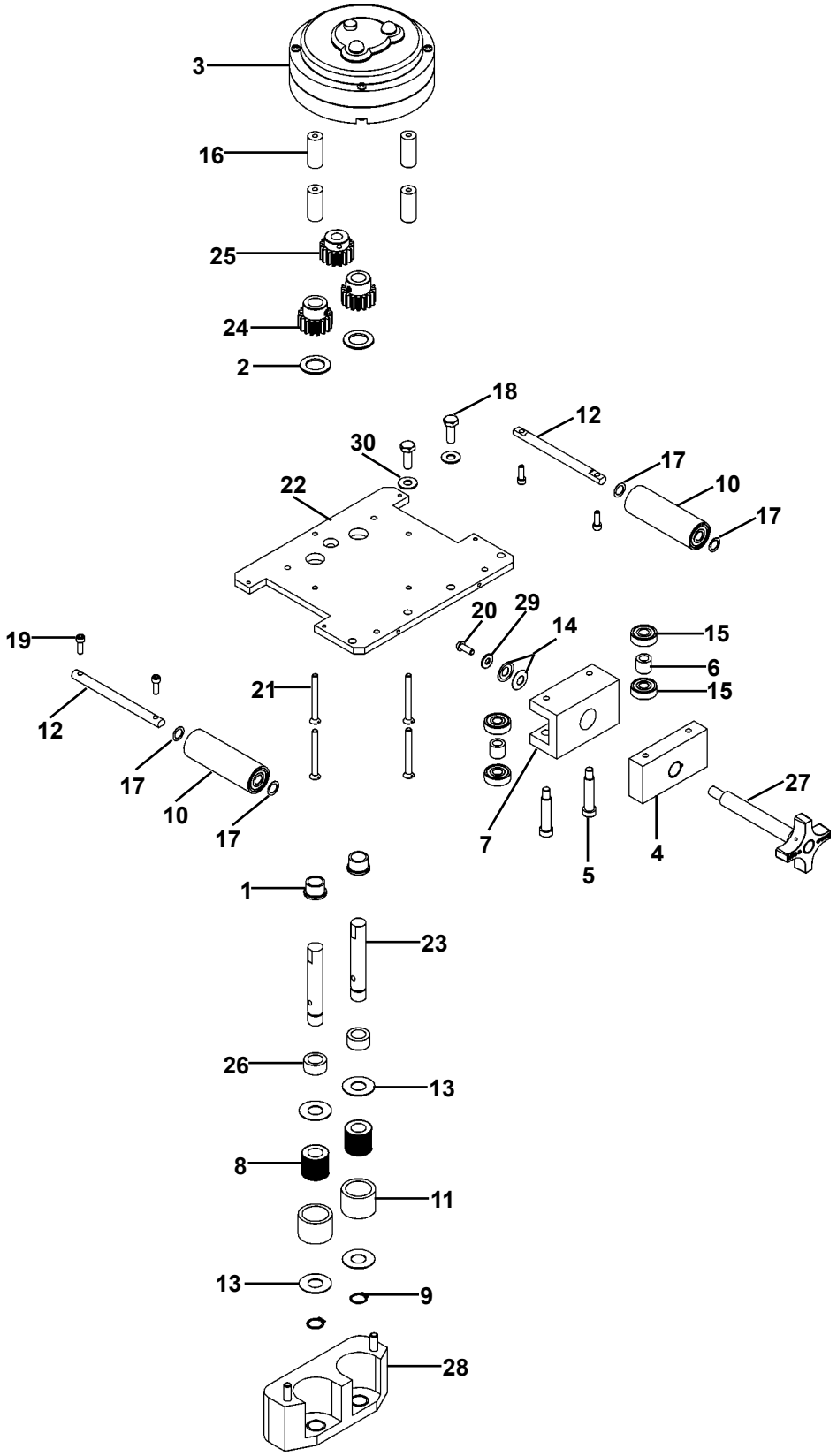

UNI-1020 BASE ASSEMBLY / PARTS LIST

ITEM	QTY	PART NUMBER	DESCRIPTION
1	2	BER-1001	Flg. Brg. .502 x .627 x .750 x .094
2	2	BER-1002	Thrust Washer .627 x 1.004 x .063
3	1	BUG-1550	Gear Motor 150:1
4	1	BUG-1854	Screw Block w/ Insert
5	2	BUG-1858	Soc Hd Shr Bolt 5/16 x 1-1/4 x 1/4-20
6	2	BUG-1859	Bearing Spacer
7	1	BUG-1863	Idler Channel
8	2	BUG-1888	Drive Roll
9	2	BUG-1893	Retaining Ring 1/2" External
10	2	BUG-1895	Roller Bearing Assy.
11	2	BUG-1897	Sleeve
12	2	BUG-1898	Axle
13	4	BUG-1899	Washer 1-1/6" O.D. x 1/2" I.D. x 1/32"
14	2	BUG-1988	Belleville Washer
15	4	BUG-2012	Bearing
16	4	BUG-5121	Stand Off
17	4	CON-1029	Washer 5/16" x .015"
18	2	FAS-0357	Hex Hd Cap Scr 1/4-20 x 3/4
19	4	FAS-0525	Soc Hd Cap Scr 8-32 x 1/2"
20	1	FAS-1445	Phil Pan Hd Scr 10-32 x 1/2"
21	4	FAS-2824	Flt Hd Slt Scr 8-32 x 1-3/4"
22	1	UNI-1021	Base Plate
23	2	UNI-1022	Slave Shaft
24	2	UNI-1024	Slave Pinion
25	1	UNI-1025	Pinion / Sleeve Assy.
26	2	UNI-1029	Shaft Spacer
27	1	UNI-1030	Tensioning Screw Assy.
28	1	UNI-1040	Drive Wheel Blk. Assy.
29	1	WAS-0230	#10 Washer
30	2	WAS-0240	1/4" SAE Washer

UNI-2020 “L” BASE ASSEMBLY / EXPLODED VIEW

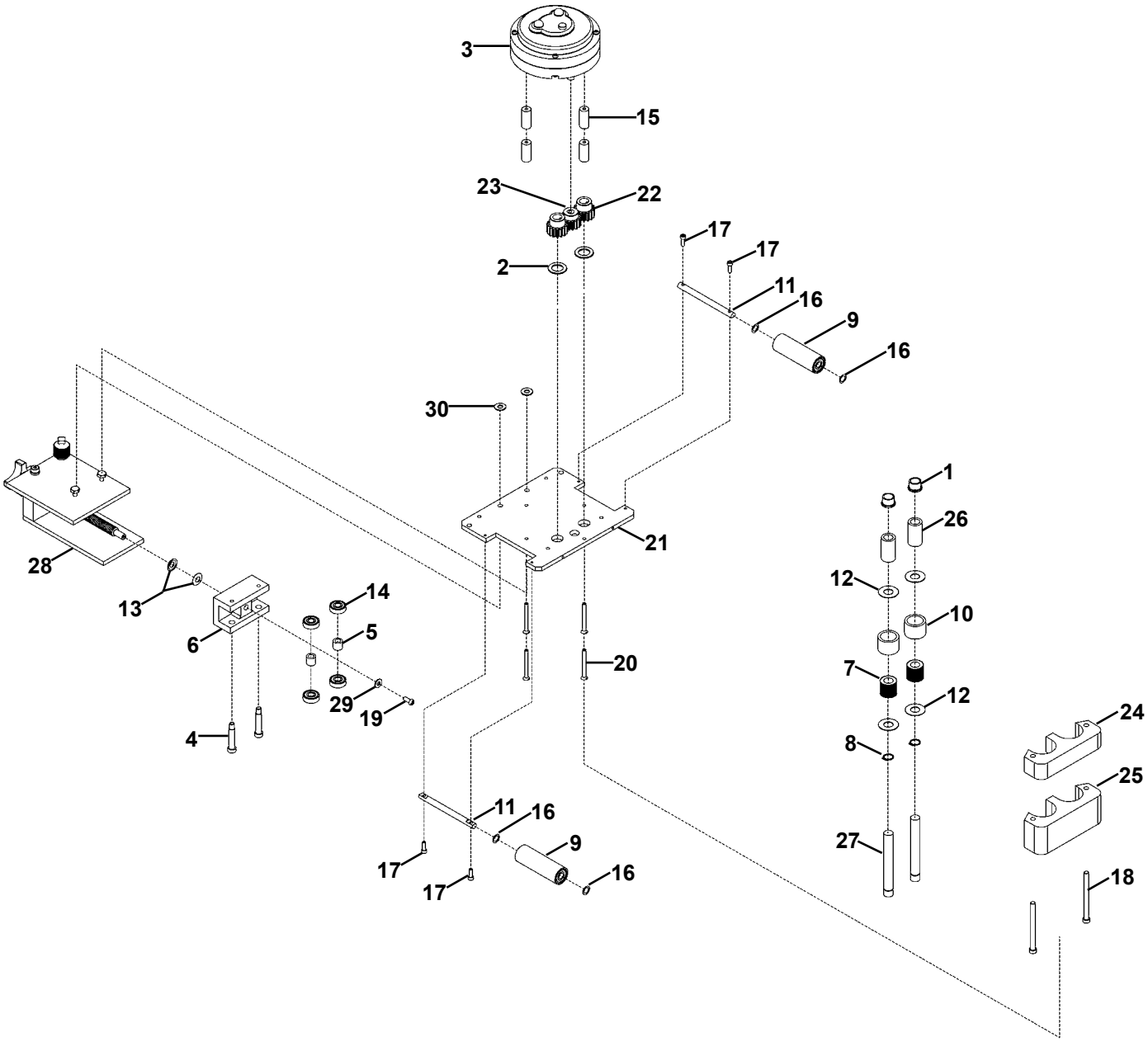

UNI-2020 “L” BASE ASSEMBLY / PARTS LIST

ITEM	QTY	PART NUMBER	DESCRIPTION
1	2	BER-1001	Flg Brg .502 x .627 x .375 x .750 x .094
2	2	BER-1002	Thrust Washer .627 x 1.004 x .063
3	1	BUG-1550	Gear Motor (150:1)
4	2	BUG-1858	Soc Hd Shr Scr 5/16 x 1-1/4 x 1/4-20
5	2	BUG-1859	Bearing Spacer
6	1	BUG-1863	Idler Channel
7	2	BUG-1888	Drive Roll
8	2	BUG-1893	Retaining Ring 1/2" External
9	2	BUG-1895	Roller Bearing Assy.
10	2	BUG-1897	Sleeve
11	2	BUG-1898	Axle
12	4	BUG-1899	Washer 1-1/6" O.D. x 1/2" I.D. x 1/32"
13	2	BUG-1988	Belleville Washer .323 I.D. x .709 O.D.
14	4	BUG-2012	Bearing
15	4	BUG-5121	Stand Off
16	4	CON-1029	Washer 5/16" x .015"
17	4	FAS-0525	Soc Hd Cap Scr 8-32 x 1/2"
18	2	FAS-2559	Soc Hd Cap Scr 1/4-20 x 3"
19	1	FAS-1445	Phil Pan Hd Scr 10-32 x 1/2"
20	4	FAS-2824	Flt Hd Slt Scr 8-32 x 1-3/4"
21	1	UNI-1021	Base Plate
22	2	UNI-1024	Slave Pinion
23	1	UNI-1025	Pinion / Sleeve Assy.
24	1	UNI-1034	Uni-Bug Drive Wheel Spacer
25	1	UNI-1040	Drive Wheel Blk Assy.
26	2	UNI-1062	Shaft Spacer 1-3/8" LG.
27	2	UNI-1063	Slave Shaft 4" LG.
28	1	UNI-1320	Angle Adaptor Kit
29	1	WAS-0230	#10 Washer
30	2	WAS-0240	1/4" SAE Washer

UNI-2120 “T” BASE ASSEMBLY / EXPLODED VIEW

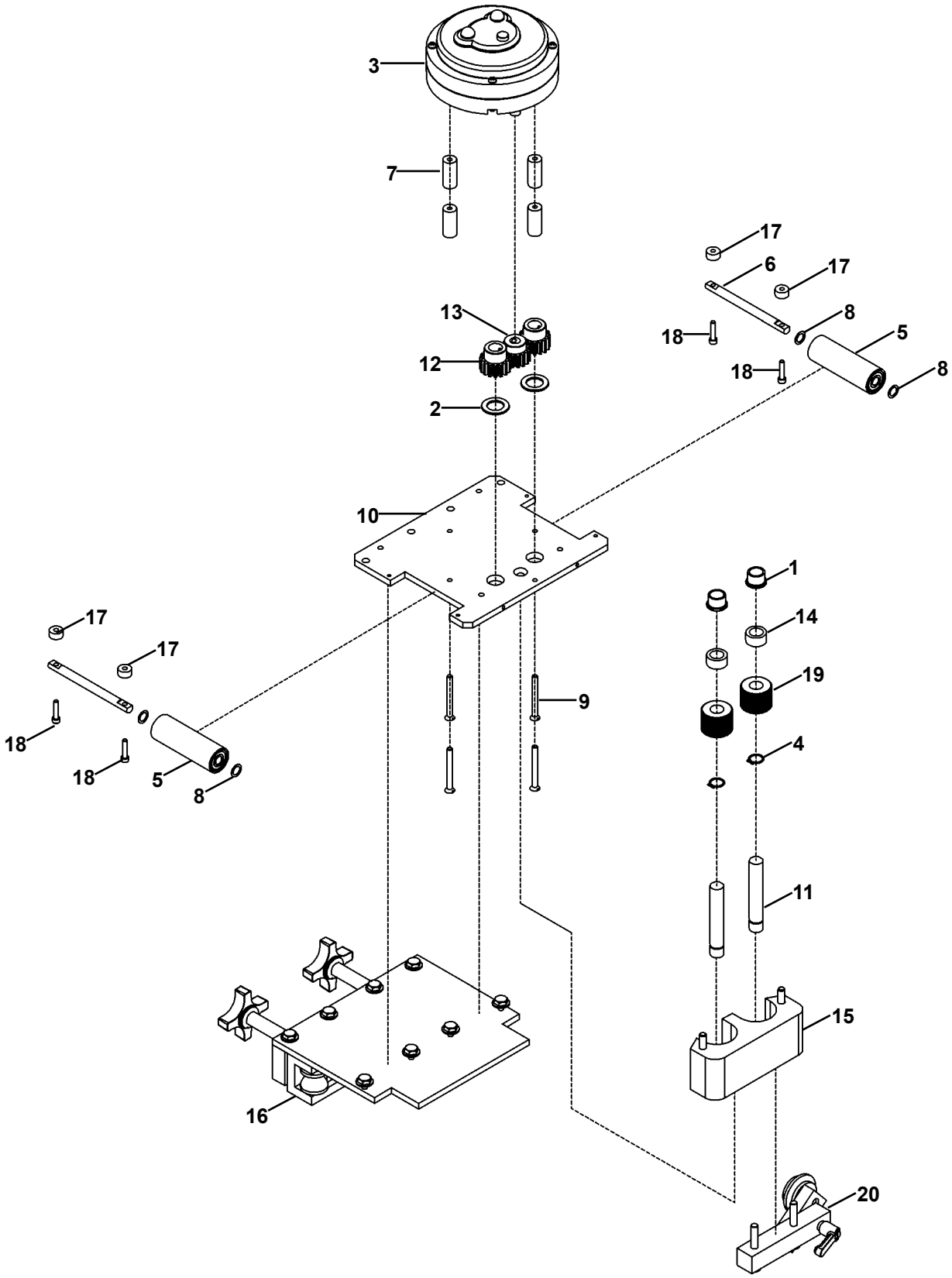

UNI-2120 “T” BASE ASSEMBLY / PARTS LIST

ITEM	QTY	PART NUMBER	DESCRIPTION
1	2	BER-1001	Flg Brg .502 x .627 x .375 x .750 x .094
2	2	BER-1002	Thrust Washer .627 x 1.004 x .063
3	1	BUG-1550	Gear Motor (150:1)
4	2	BUG-1893	Retaining Ring 1/2" External
5	2	BUG-1895	Roller Bearing Assy.
6	2	BUG-1898	Axle
7	4	BUG-5121	Stand Off
8	4	CON-1029	Washer
9	4	FAS-2824	Flt Hd Slt Scr 8-32 x 1-3/4"
10	1	UNI-1021	Base Plt.
11	2	UNI-1022	Slave Shaft
12	2	UNI-1024	Slave Pinion
13	1	UNI-1025	Pinion / Sleeve Assy.
14	2	UNI-1029	Shaft Spacer
15	1	UNI-1040	Drive Wheel Blk. Assy.
16	1	UNI-1336	Adaptor 6" T Stiffener Kit
17*	4	BUG-1528	Spacer
18*	4	FAS-0527	Soc Hd Scr 8-32 x 3/4"
19*	2	UNI-1019	Steel Drive Roll
20*	1	UNI-2130	Tension Wheel Assy.

NOTE: (*) Included in UNI-1336 Adaptor T-Stiffener Kit.

UNI-2140 “T” BASE ASSEMBLY / EXPLODED VIEW

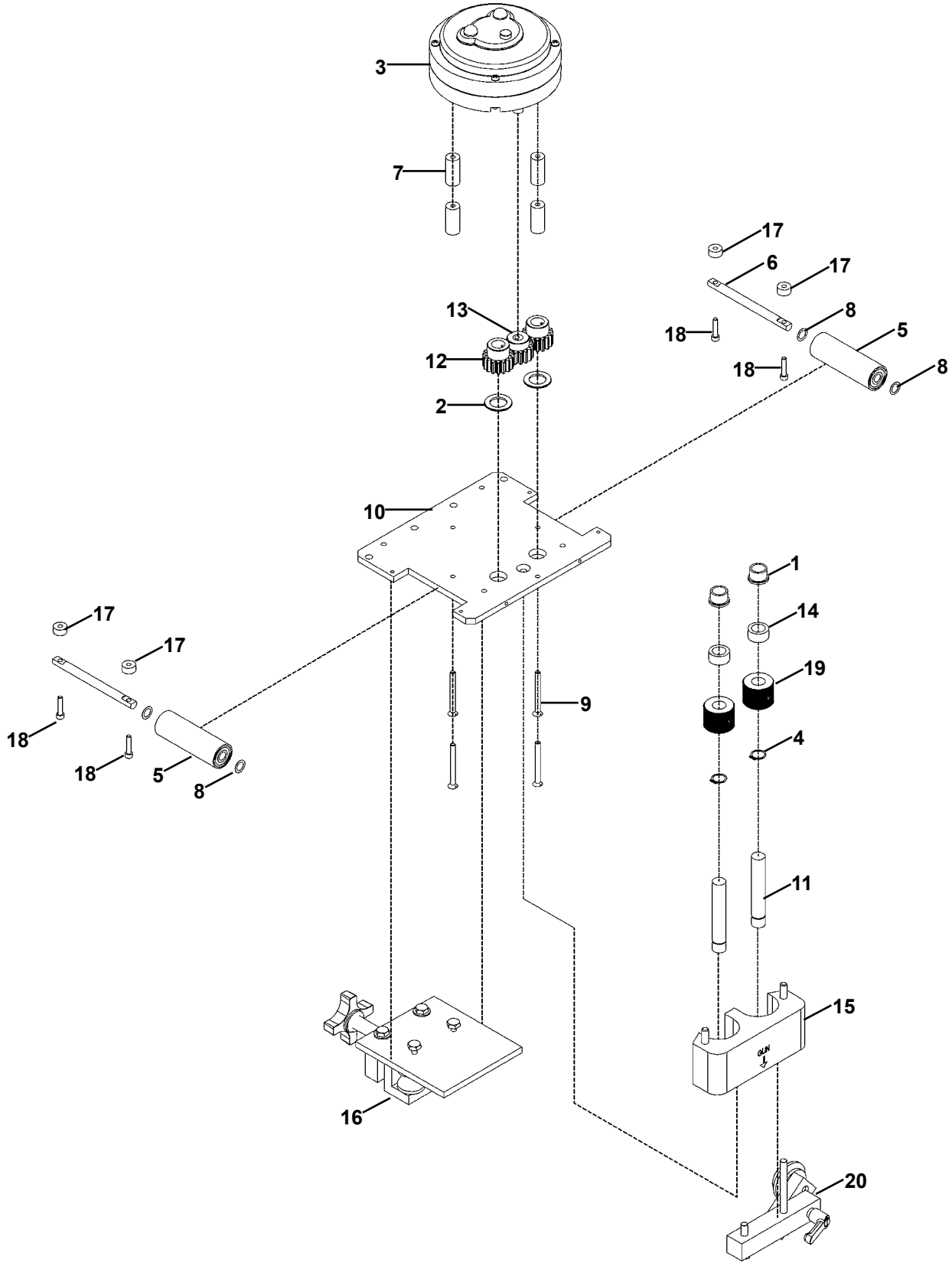

UNI-2140 “T” BASE ASSEMBLY / PARTS LIST

ITEM	QTY	PART NUMBER	DESCRIPTION
1	2	BER-1001	Flg Brg .502 x .627 x .375 x .750 x .094
2	2	BER-1002	Thrust Washer .627 x 1.004 x .063
3	1	BUG-1550	Gear Motor (150:1)
4	2	BUG-1893	Retaining Ring 1/2" External
5	2	BUG-1895	Roller Bearing Assy.
6	2	BUG-1898	Axle
7	4	BUG-5121	Stand Off
8	4	CON-1029	Washer
9	4	FAS-2824	Flt Hd Slt Scr 8-32 x 1-3/4"
10	1	UNI-1021	Base Plt.
11	2	UNI-1022	Slave Shaft
12	2	UNI-1024	Slave Pinion
13	1	UNI-1025	Pinion / Sleeve Assy.
14	2	UNI-1029	Shaft Spacer
15	1	UNI-1040	Drive Wheel Blk. Assy.
16	1	UNI-1330	Adaptor 2"-4" T Stiffener Kit
17*	4	BUG-1528	Spacer
18*	4	FAS-0527	Soc Hd Scr 8-32 x 3/4"
19*	2	UNI-1019	Steel Drive Roll
20*	1	UNI-2130	Tension Wheel Assy.

NOTE: (*) Included in UNI-1330 Adaptor T-Stiffener Kit.

UNI-2220 BULB BASE ASSEMBLY / EXPLODED VIEW

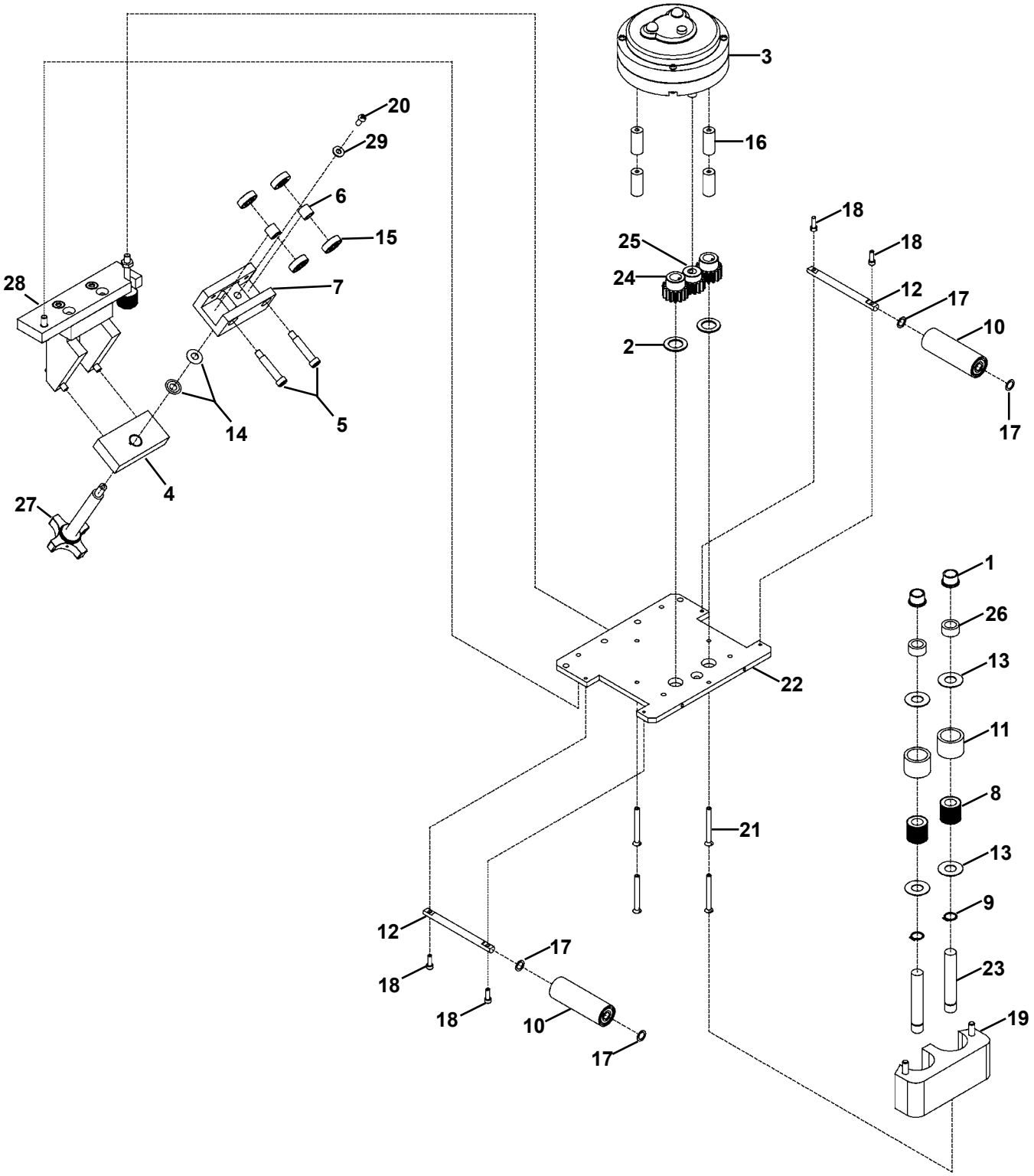

UNI-2220 BULB BASE ASSEMBLY / PARTS LIST

ITEM	QTY	PART NUMBER	DESCRIPTION
1	2	BER-1001	Flg Brg .502 x .627 x .375 x .750 x .094
2	2	BER-1002	Thrust Washer .627 x 1.004 x .063
3	1	BUG-1550	Gear Motor (150:1)
4	1	BUG-1854	Screw Block w/ Insert
5	2	BUG-1858	Soc Hd Shr Scr 5/16 x 1-1/4 x 1/4-20
6	2	BUG-1859	Bearing Spacer
7	1	BUG-1863	Idler Channel
8	2	BUG-1888	Drive Roll
9	2	BUG-1893	Retaining Ring 1/2" External
10	2	BUG-1895	Roller Bearing Assy.
11	2	BUG-1897	Sleeve
12	2	BUG-1898	Axle
13	4	BUG-1899	Washer 1-1/6" O.D. x 1/2" I.D. x 1/32"
14	2	BUG-1988	Belleville Washer .323 I.D. x .709 O.D.
15	4	BUG-2012	Bearing
16	4	BUG-5121	Stand Off
17	4	CON-1029	Washer 5/16" x .015"
18	4	FAS-0525	Soc Hd Cap Scr 8-32 x 1/2"
19	1	UNI-1040	Drive Wheel Blk. Assy.
20	1	FAS-1445	Phil Pan Hd Scr 10-32 x 1/2"
21	4	FAS-2824	Flt Hd Slt Scr 8-32 x 1-3/4"
22	1	UNI-1021	Base Plate
23	2	UNI-1022	Slave Shaft
24	2	UNI-1024	Slave Pinion
25	1	UNI-1025	Pinion / Sleeve Assy.
26	2	UNI-1029	Shaft Spacer
27	1	UNI-1030	Tensioning Screw Assy.
28	1	UNI-1305	Bulb Flat Welder Adaptor
29	1	WAS-0230	#10 Washer

UNI-1350 DUAL WELDING GROUP / EXPLODED VIEW / PARTS LIST

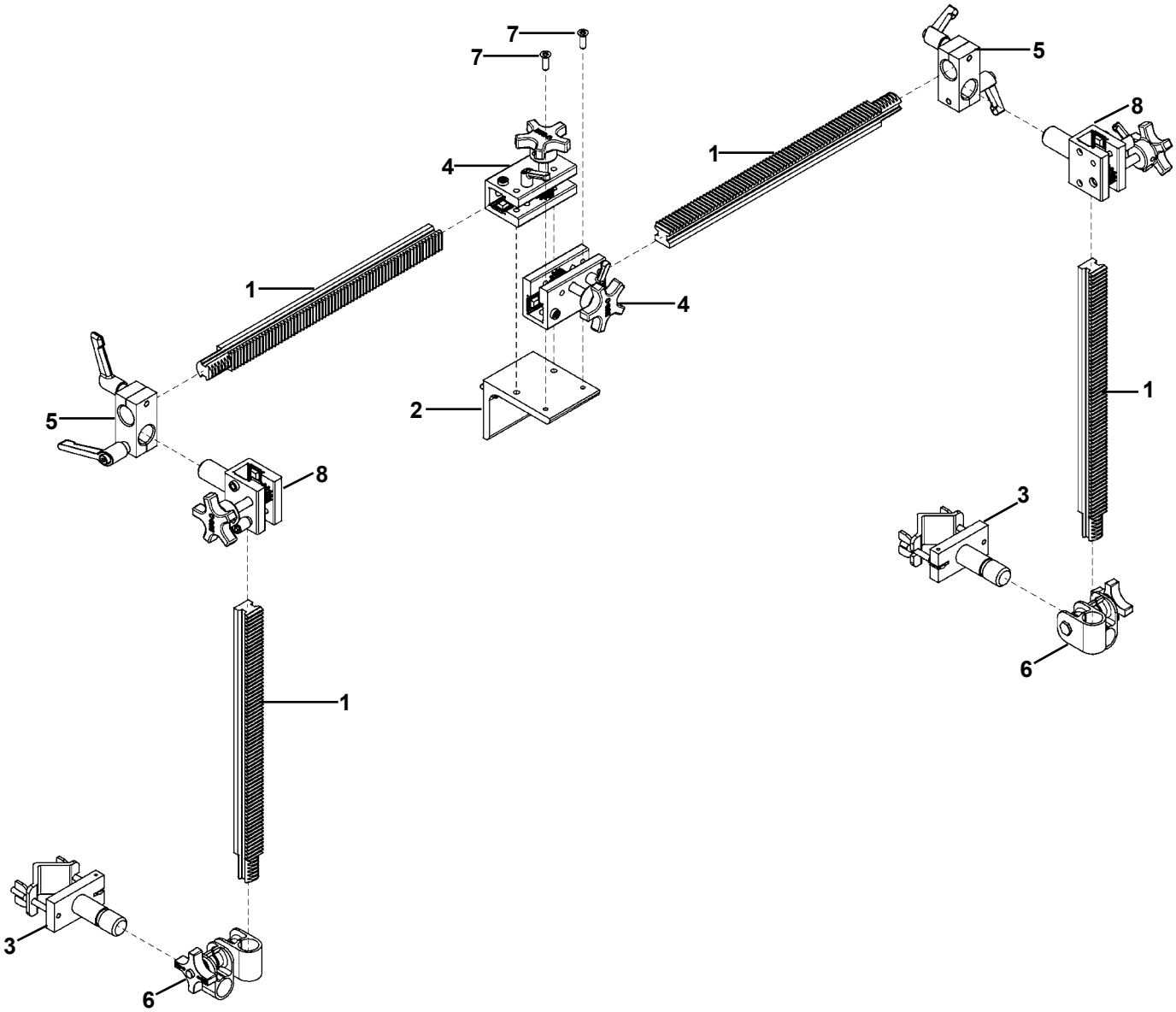

ITEM	QTY	PART NUMBER	DESCRIPTION
1	4	BUG-1796	Machined Rack 14"
2	1	BUG-1891	Double Racker Mount
3	2	BUG-2708	Clamp
4	2	BUG-5451	3.5" Rackholder
5	2	BUG-5462	Right Angle Clamp
6	2	CON-1020	Swivel Clamp Assy.
7	2	FAS-0957	Flt Hd Scr 1/4-20 x 3/4"
8	2	UNI-1036	Rackholder w/ Post

UNI-1355 DUAL CABLE ANCHOR / EXPLODED VIEW / PARTS LIST

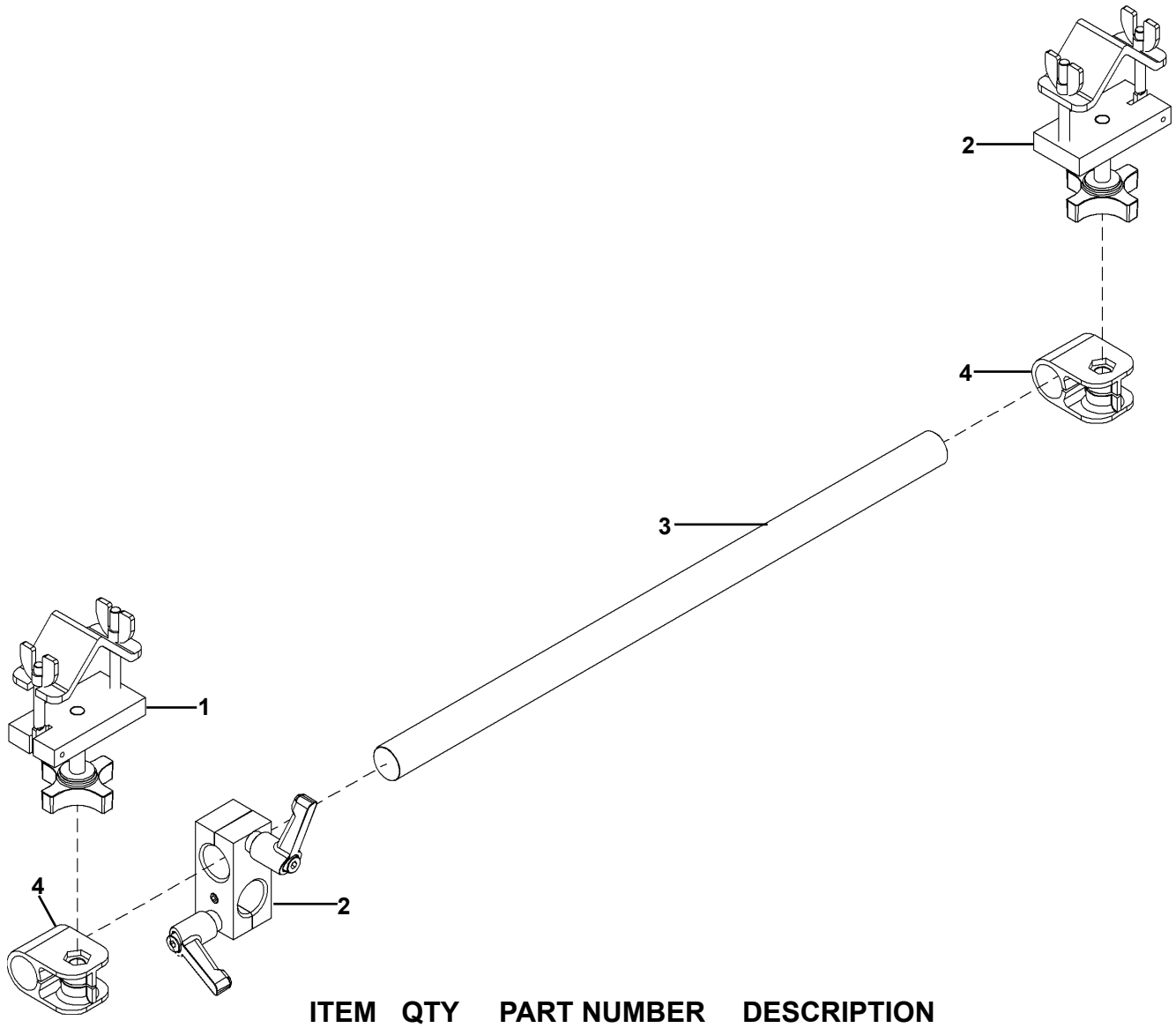

ITEM	QTY	PART NUMBER	DESCRIPTION
1	2	BUG-2660	Fits All Clamp
2	1	BUG-5462	Right Angle Clamp
3	1	BUG-9180-18	Rod 18"
4	2	PAN-1033	Rod Clamp

BUG-1855 WELDING GROUP / EXPLODED VIEW / PARTS LIST

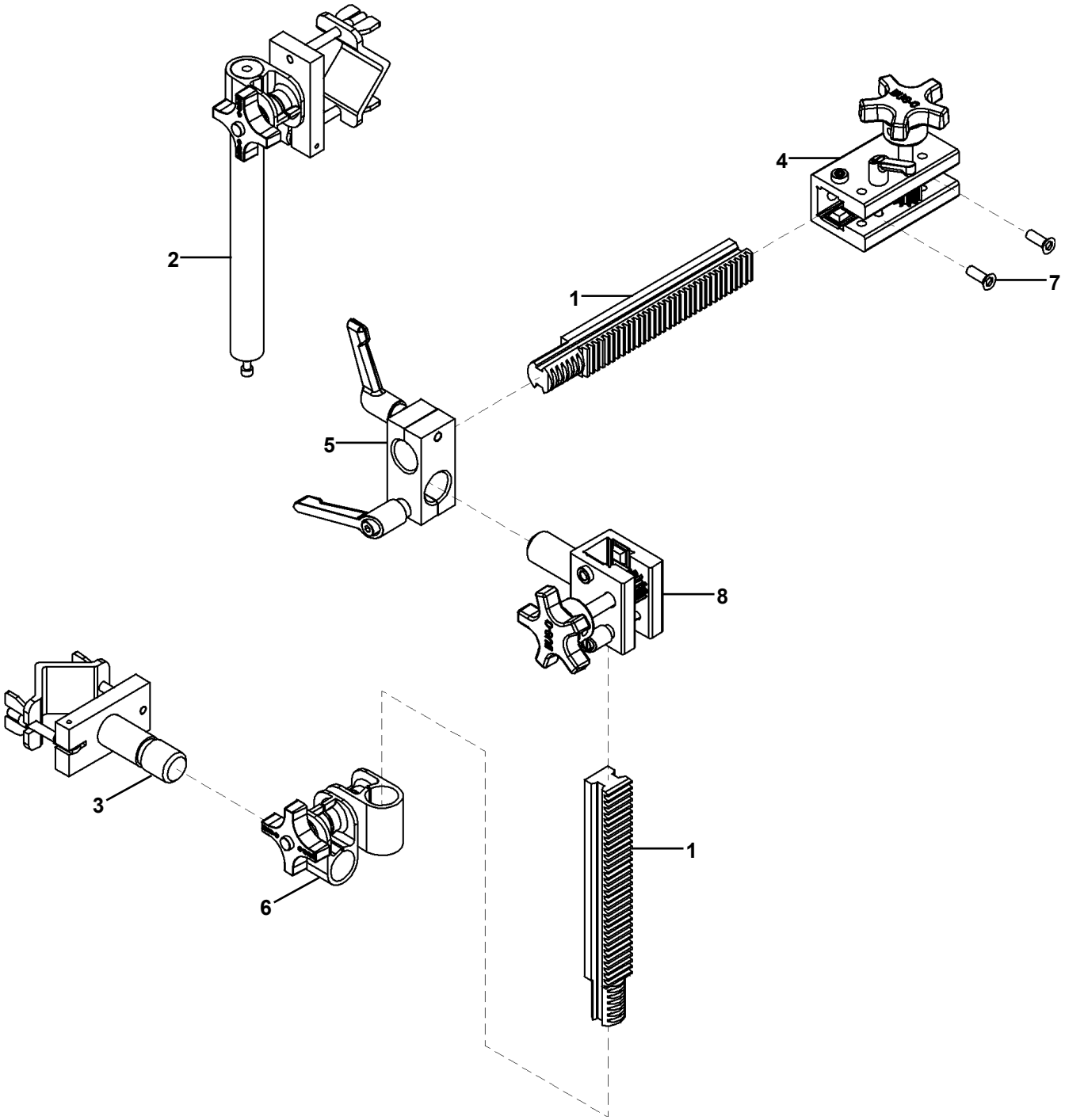

ITEM	QTY	PART NUMBER	DESCRIPTION
1	2	BUG-1853	Machined Rack 7-1/2"
2	1	BUG-1881	Cable Anchor w/ Swivel
3	1	BUG-2708	Clamp
4	1	BUG-5451	3.5" Rack Holder
5	1	BUG-5462	Right Angle Clamp
6	1	CON-1020	Swivel Clamp Assy.
7	2	FAS-0957	Flt Hd Soc Scr 1/4-20 x 3/4"
8	1	UNI-1036	Rackrider w/ Post

BUG-1875 CUTTING GROUP / EXPLODED VIEW / PARTS LIST

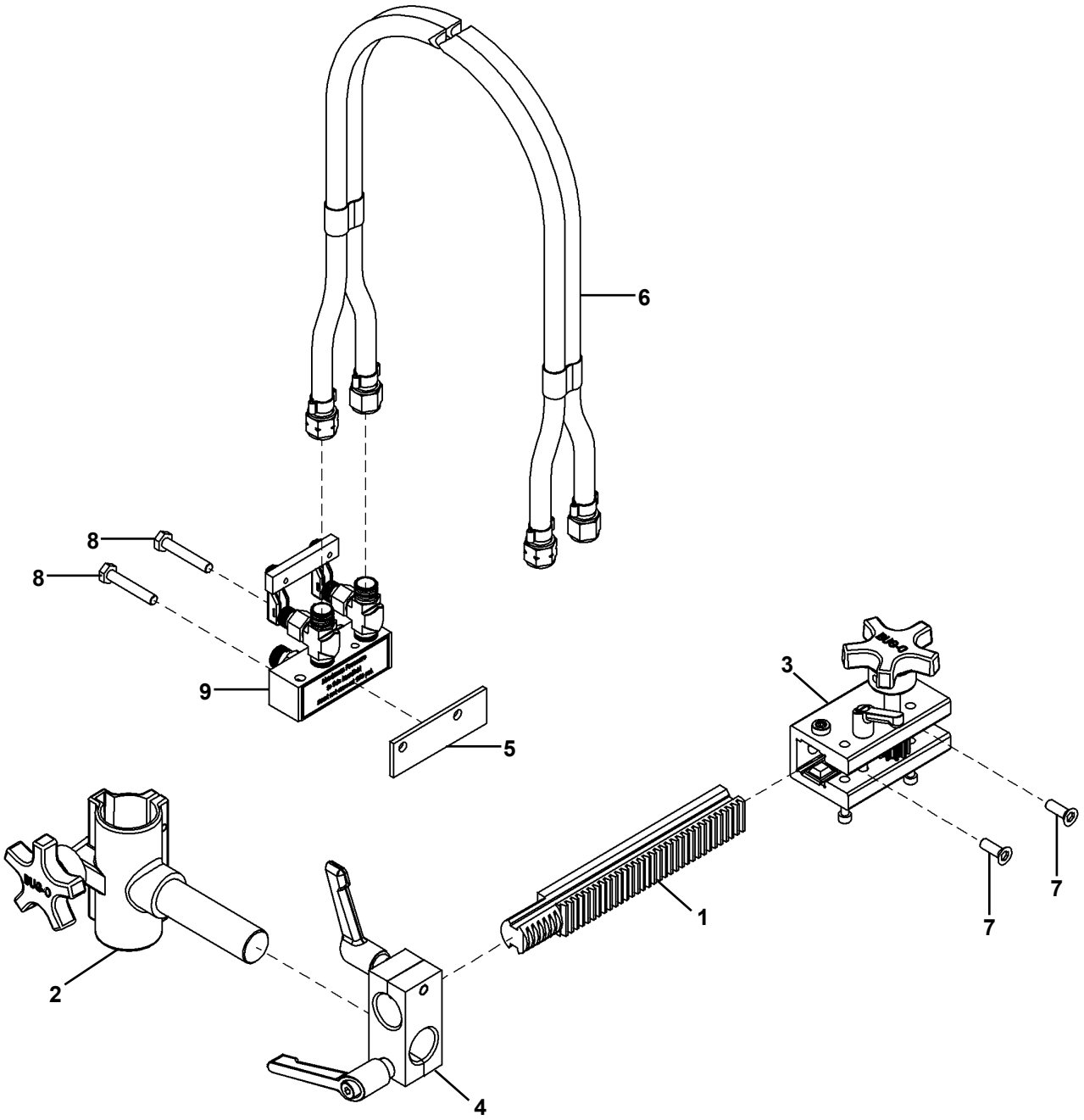

ITEM	QTY	PART NUMBER	DESCRIPTION
1	1	BUG-1853	Machined Rack 7-1/2"
2	1	BUG-5188	Torch Holder Assy.
3	1	BUG-5451	3.5" Rackholder
4	1	BUG-5462	Right Angle Clamp
5	1	BUG-9729	Spacer
6	1	CIR-1010-2	Hose Assy.
7	2	FAS-0957	Flt Hd Soc Scr 1/4-20 x 3/4"
8	2	FAS-2353	Hex Hd Cap Scr 1/4-20 x 1/2"
9	1	GOF-3025	Quick-Acting Manifold

TROUBLESHOOTING GUIDE

PROBLEM	CAUSE	REMEDY
Does not run. Indicator lights off.	No input power	• Turn on the circuit breaker • Plug in the line cord • Insure there is power at the outlet
	Broken wire	• Unplug the machine from power. Examine internally and rewire at fault.
	Bad circuit	• Replace if breaker has input power and no output when in the “ON” position
	Bad travel switch when “ON”	• Replace if breaker has input power and no output
Does not run. Indicator light off and circuit breaker is tripped.	Wiring short	• Unplug the machine from power. Examine internally and rewire at fault.
	Burned out part	• Unplug the machine from power. Examine internally and replace any part that looks burned up.
	Other	• Can only be determined by factory or qualified repair person.
Does not run. Indicator light on.	Bad connection	• Unplug the machine from power. Examine internally and fix any broken connections. • Tighten terminal screws on speed control board.
	Open transformer	• Replace the transformer if there is input power on the primary and no output on the secondary. (12 VAC/CT is expected.)
	Burned out part	• Unplug the machine from power. Examine internally and replace any part that looks burned up.
	Wiring short	• Unplug the machine from power. Examine internally and rewire fault.
	Failed motor	• Replace the motor if it has input voltage and does not run.
	Failed control card	• Unplug the machine from power. Check the card for damaged traces or parts. Repair or replace if required. • Verify the card has 12 VAC/CT input power. Replace the card if the output to the motor leads is 0 volts with the speed knob at maximum.
	Other	• Can only be determined by factory or qualified repair person.

TROUBLESHOOTING GUIDE CONTINUED

PROBLEM	CAUSE	REMEDY
Unit runs, but no speed control.	Faulty control card	• Unplug the machine from power. Verify there are no bad connections to the control card or on the board. Replace the card.
	Failed speed potentiometer	• Replace if visually appears damaged. Verify no loose or broken connections to the part.
Unit runs, but erratic or poor speed control.	Poor input voltage regulation	• Verify the machine power source is stable and at the correct voltage. Measure at the outlet.
	Faulty control card	• Unplug the machine from power. Verify there are no bad connections to the control card or board. Replace the board.
	Damaged wheel or wheel assembly	• Turn the machine upside down and off. Replace any wheels that are damaged. Replace any idler wheels that do not freely turn.
	Pitted workpiece	• Verify the workpiece is not pitted or damaged in a way that will give an uneven drive surface to the machine wheels. Verify the workpiece thickness does not vary significantly where the machine wheels travel.

WARRANTY

Limited Warranty

Model _____
Serial No. _____
Date Purchased: _____

For a period of twelve (12) months from delivery, BUG-O Systems warrants to the original purchaser (does not include authorized distributors), that a new machine is free from defects in material and workmanship and agrees to repair or replace, at its option, any defective parts or machine. This warranty does not apply to machines, which after our inspection, are determined to have been damaged due to neglect, abuse, overloading, accident or improper usage. All shipping and handling charges will be paid by customer.

BUG-O Systems makes no warranty of merchantability and makes no other warranty, expressed or implied, beyond the warranty expressly set forth above. Buyer's remedy for breach of warranty, hereunder, shall be limited to repair or replacement of non-conforming parts and machines. Under no circumstances shall consequential damages be recoverable.

HOW TO OBTAIN SERVICE:
If you think this machine is not operating properly, re-read the instruction manual carefully, then call your Authorized BUG-O distributor/dealer. If he cannot give you the necessary service, write or phone us to tell us exactly what difficulty you have experienced. BE SURE to mention the MODEL and SERIAL numbers.